DRAINAGE ANALYSIS

PROPOSED HOUSING DEVELOPMENT

10 LEE ROAD
MADBURY, NH

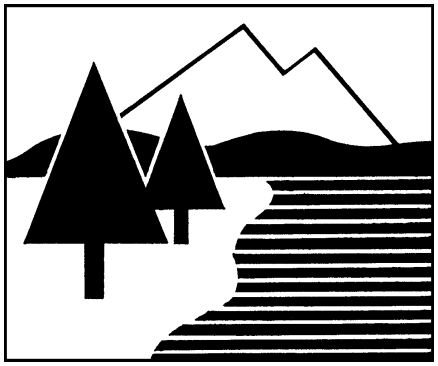

FOR
10 LEE ROAD, LLC

29 October 2021

10-29-2021

Ambit Engineering, Inc.
Civil Engineers and Land Surveyors
200 Griffin Road, Unit 3
Portsmouth, NH 03801
Phone: 603.430.9282; Fax: 603.436.2315
E-mail: jrc@ambitengineering.com
(Ambit Job Number 3142)

TABLE OF CONTENTS

REPORT

Executive Summary	1
Introduction / Project Description	2
Methodology	2
Site Specific Information	3
Pre-Development Drainage	4
Post-Development Drainage	5
Offsite Infrastructure Capacity	6
Erosion and Sediment Control Practices	7
Conclusion	7
References	8

APPENDIX

Vicinity (Tax) Map	A
Tables, Charts, Etc.	B
HydroCAD Drainage Analysis Calculations	C
Soil Survey Information	D
FEMA FIRM Map	E
Inspection & Long Term Maintenance Plan	F

ATTACHMENTS

Existing Subcatchment Plan	W1
Proposed Subcatchment Plan	W2

EXECUTIVE SUMMARY

This drainage analysis examines the pre-development (existing) and post-development (proposed) stormwater drainage patterns for the proposed building and associated future site improvements at 10 Lee Road in Madbury, NH. The site is shown on the Town of Madbury Assessor's Tax Map 8 as Lot 9. The total size of the lot is 1,586,706 square-feet (36.4258 acres).

The development will provide for the future construction of a 6,996 square-foot building, with associated landscaping, utilities, and parking. The new buildings will be serviced by public water and electricity. Septic systems will be provided on-site. The development has the potential to increase stormwater runoff to adjacent properties, and therefore must be designed in a manner to prevent that occurrence. This will be done primarily by capturing stormwater runoff and routing it through appropriate stormwater facilities, designed to ensure that there will be no increase in peak runoff from the site as a result of this project.

The hydrologic modeling utilized for this analysis uses the "Extreme Precipitation" values for rainfall from The Northeast Regional Climate Center (Cornell University).

INTRODUCTION / PROJECT DESCRIPTION

This drainage report is designed to assist the owner, planning board, contractor, regulatory reviewer, and others in understanding the impact of the proposed development project on local surface water runoff and quality. The project site is shown on the Town of Madbury, NH Assessor's Tax Map 8 as Lot 9. Bounding the site to north is NH Route 155 and a trust. Bounding the site to east and south is Town property, private residences, and an LLC. Bounding the site to the west is private residences and a Town conservation area. A vicinity map is included in the Appendix to this report.

The proposed development will add a new building and a new parking area adjacent to existing buildings on the site. This report makes some concept assumptions as to the future impervious coverage of the proposed lots, as requested by the Town.

This report includes information about the existing site and the proposed building necessary to analyze stormwater runoff and to design any required mitigation. The report includes maps of pre-development and post-development watersheds, subcatchment areas and calculations of runoff. The report will provide a narrative of the stormwater runoff and describe numerically and graphically the surface water runoff patterns for this site. Proposed stormwater management methods will also be described, as well as erosion and sediment control practices. To fully understand the proposed site development the reader should also review a complete site plan set in addition to this report.

METHODOLOGY

"Extreme Precipitation" values from The Northeast Regional Climate Center (Cornell University) have been used for modeling purposes. These values have been used in this analysis.

This report uses the US Soil Conservation Service (SCS) Method for estimating stormwater runoff. The SCS method is published in The National Engineering Handbook (NEH), Section 4 "Hydrology" and includes the Technical Release No. 20, (TR-20) "Computer Program for Project Formulation Hydrology", and Technical Release No. 55 (TR-55) "Urban Hydrology for Small Watersheds" methods. This report uses the HydroCAD version 10.0 program,

written by HydroCAD Software Solutions LLC, Chocorua, N.H., to apply these methods for the calculation of runoff and for pond modeling. Rainfall data and runoff curve numbers are taken from "The Stormwater Management and Erosion Control Handbook for Urban and Developing Areas in New Hampshire."

Time of Concentration (Tc) is calculated by entering measured flow path data such as flow path type, length, slope and surface characteristics into the HydroCAD program. For the purposes of this report, a minimum time of concentration of 5 minutes is used.

The storm events used for the calculations in this report are the 2-year, 10-year, and 25-year (24-hour) storms. Watershed basin boundaries have been delineated using topographic maps prepared by Ambit Engineering and field observations to confirm.

SITE SPECIFIC INFORMATION

Based on the United States Department of Agriculture (USDA) Natural Resources Conservation Service (NRCS), Soil Survey of Rockingham County, New Hampshire the site is made up of eight soil types:

Soil Symbol	Soil Name and Slopes
CfB	Charlton fine sandy loam, 3 to 8 percent slopes
CsB	Charlton fine sandy loam, 3 to 8 percent slopes, very stony
PdB	Paxton fine sandy loam, 0 to 8 percent slopes, very stony
PdD	Paxton fine sandy loam, 15 to 25 percent slopes, very stony
PdE	Paxton very stony fine sandy loam, 25 to 60 percent slopes
ScA	Scantic silt loam, 0 to 3 percent slopes
SuB	Sutton fine sandy loam, 0 to 8 percent slopes, very stony
WsB	Woodbridge fine sandy loam, 0 to 8 percent slopes, very stony

All existing and proposed site development takes place on one soil type:

CfB – Charlton fine sandy loam, 3 to 8 percent slopes. The soil report qualifies the depth to the water table or restrictive feature as greater than 80 inches. The Hydrologic Soil Group

is class B, with an estimated infiltrative capacity of moderately low to high (0.14 to 14.17 in/hr).

A copy of the custom soil survey for this project site is included in the Appendix to this report.

The physical characteristics of the site consist of flat (1-3%) to steep (25-60%) grades that generally slope from the north to the south of the lot. Elevations on the site range from 140 to 194 feet above sea level. The existing site is partially developed and includes two existing buildings located at the north of the lot, with an asphalt parking area. Vegetation around the developed portion of the lot consists of established grasses, shrubs, and trees. The rest of the lot is undeveloped, forested land.

According to the Federal Emergency Management Agency (FEMA) Flood Insurance Rate Map (FIRM) number 33017C0320E (effective date September 30, 2015), the project site is located in Zone X and is determined to be outside of the 0.2% annual chance floodplain. A copy of the FIRM map is included in the Appendix.

PRE-DEVELOPMENT DRAINAGE

In the pre-development condition, the site has been analyzed as five subcatchment basins (E1, E2, E3, E4, and E5) based on localized topography and discharge location.

Subcatchment E1 contains all the proposed development area and most of the existing development, and drains to the west of the north “arm” of the lot. Subcatchment E2 contains a minor amount of developed area and drains to the east of the north arm of the lot. Subcatchment E3 drains south to Beards Creek running through the middle of the lot and then to the east. Subcatchment E4 is a small area diverted from subcatchment E3, which drains to the east. Subcatchment E5 forms the entire southern “arm” of the property, which drains to the north in the direction of Beards Creek. E5 contains some development in the form of electrical lines, but that land use is not expected to change the impervious area in the analysis, and will not be altered by the proposed development.

Table 1: Pre-Development Watershed Basin Summary

Watershed Basin ID	Basin Area (SF)	Tc (MIN)	CN	10-Year Runoff (CFS)	25-Year Runoff (CFS)	To Design Point
E1	295,488	19.0	60	7.75	13.94	DP1
E2	15,070	5.5	75	1.36	1.98	DP1
E3	232,162	58.3	58	2.35	4.51	DP1
E4	371	5.0	55	0.01	0.02	DP1
E5	1,032,671	24.0	68	38.00	60.48	DP1

POST-DEVELOPMENT DRAINAGE

The proposed development has been designed to match the pre-development drainage patterns to the greatest extent feasible. In the post-development condition, the site has been analyzed as six major watershed basins, (P1a, P1b, P2, P3, P4, and P5). Since the design of the future houses is currently conceptual, some assumptions were made regarding the delineation of watershed basins and the determination of land usage. The delineation between Basins P2, P3, P4 and P5 correspond to approximately the same as the delineation between E2, E3, E4 and E5, respectively. Subcatchments P1a and P1b were subdivided from subcatchment P1, to represent the distinction between relatively unchanged land in P1a, and proposed development in P1b. Subcatchments P1a, P1b, and P2 are the only lots with any expected change from the proposed development.
Subcatchment P1a contains a significant increase in impervious area, and as such, will be detained in a detention pond, and released with an outlet control structure. In the event of a 100-year storm event or an outlet control structure failure, an emergency bypass was designed to release stormwater. Since all subcatchments ultimately flow to Beards Creek, the creek will serve as the considered discharge point for the entire property.

Table 2: Post-Development Watershed Basin Summary

Watershed Basin ID	Basin Area (SF)	Tc (MIN)	CN	10-Year Runoff (CFS)	25-Year Runoff (CFS)	Design Point
P1a	214,195	19.0	58	4.82	9.06	DP1
P1b	83,653	6.9	81	8.82	12.28	DP1
P2	13,441	5.5	66	0.83	1.32	DP1
P3	231,924	58.3	58	2.35	4.50	DP1
P4	382	5.0	55	0.01	0.02	DP1
P5	1,032,212	24.0	70	38.00	60.48	DP1

The overall impervious coverage of the area analyzed in this report for all basins **increases** from 0.704 acres (1.95%) in the pre-development condition to 1.238 acres (3.42%) in the post-development condition. Since the site represents an increase in impervious area, the project proposes the construction of a detention pond to reduce the peak flow discharge from the site.

Table 3 shows a summary of the comparison between pre-developed flows and post-developed flows for the design point in Beards Creek (DP1). The comparison considers the reduced flows as a result of infiltration.

Table 3: Pre-Development to Post-Development Comparison

	Q2 (CFS)		Q10 (CFS)		Q25 (CFS)		
Design Point	**Pre**	**Post**	**Pre**	**Post**	**Pre**	**Post**	**Description**
DP1	15.49	15.21	46.17	45.28	75.59	74.37	Beards Creek

Note that all drainage points of interest experience lower or equal peak flows.

OFFSITE INFRASTRUCTURE CAPACITY

There is no Town infrastructure utilized in this project in regard to storm drainage. All retention and routing to the final destination of the stormwater is done on-site.

EROSION AND SEDIMENT CONTROL PRACTICES

The erosion potential for this site as it exists is moderate due to the presence of gravel areas that are highly erodible. During construction, the major potential for erosion is wind and stormwater runoff. The contractor will be required to inspect and maintain all necessary erosion control measures, as well as installing any additional measures as required. All erosion control practices shall conform to "The Stormwater Management and Erosion Control Handbook for Urban and Developing Areas in New Hampshire." Some examples of erosion and sediment control measures to be utilized for this project during construction may include:

- Silt Soxx (or approved alternative) located at the toe of disturbed slopes
- Catch Basin Filters
- Stabilized construction entrance at access point to the site
- Temporary mulching and seeding for disturbed areas
- Spraying water over disturbed areas to minimize wind erosion

After construction, permanent stabilization will be accomplished by permanent seeding, landscaping, and surfacing the access drives and parking areas with asphalt paving and other areas with concrete walkways.

CONCLUSION

The proposed development has been designed to match the pre-development drainage patterns to the greatest extent feasible. With the design of the holding pond, the post-development runoff rates are reduced to be below the pre-development runoff rates. Erosion and sediment control practices will be implemented for both the temporary condition during construction and for final stabilization after construction. Therefore, there are no negative impacts to downstream receptors or adjacent properties anticipated as a result of this project.

REFERENCES

1. Comprehensive Environmental Inc. and New Hampshire Department of Environmental Services. *New Hampshire Stormwater Manual (Volumes 1, 2 and 3)*, December 2008 (Revision 1.0).
2. Minnick, E.L. and H.T. Marshall. *Stormwater Management and Erosion and Sediment Control Handbook for Urban and Developing Areas in New Hampshire*, prepared by Rockingham County Conservation District, prepared for New Hampshire Department of Environmental Services, in cooperation with USDA Soil Conservation Service, August 1992.
3. HydroCAD Software Solution, LLC. *HydroCAD Stormwater Modeling System Version 10.0* copyright 2013.

DRAINAGE ANALYSIS - ADDENDUM

PROPOSED HOUSING DEVELOPMENT

10 LEE ROAD
MADBURY, NH

FOR
10 LEE ROAD, LLC

29 OCTOBER 2021
ADDENDUM: 02 FEBRUARY 2022

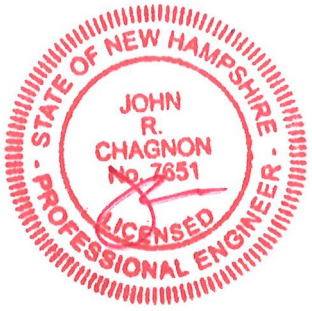

Ambit Engineering, Inc.
Civil Engineers and Land Surveyors
200 Griffin Road, Unit 3
Portsmouth, NH 03801
Phone: 603.430.9282; Fax: 603.436.2315
E-mail: jrc@ambitengineering.com
(Ambit Job Number 3142)

TABLE OF CONTENTS

REPORT

Executive Summary	1
Pre-Development Drainage	2
Post-Development Drainage	2
Conclusion	4
References	4

EXECUTIVE SUMMARY

This drainage analysis examines the pre-development (existing) and post-development (proposed) stormwater drainage patterns for the proposed building and associated future site improvements at 10 Lee Road in Madbury, NH. The site is shown on the Town of Madbury Assessor's Tax Map 8 as Lot 9. The total size of the lot is 1,586,706 square-feet (36.4258 acres). This addendum includes the results of a 50-year storm event, as is conditionally required by the Town of Madbury.

The development will provide for the future construction of a 6,996 square-foot building, with associated landscaping, utilities, and parking. The new buildings will be serviced by public water and electricity. Septic systems will be provided on-site. The development has the potential to increase stormwater runoff to adjacent properties, and therefore must be designed in a manner to prevent that occurrence. This will be done primarily by capturing stormwater runoff and routing it through appropriate stormwater facilities, designed to ensure that there will be no increase in peak runoff from the site as a result of this project.

The hydrologic modeling utilized for this analysis uses the "Extreme Precipitation" values for rainfall from The Northeast Regional Climate Center (Cornell University).

PRE-DEVELOPMENT DRAINAGE

In the pre-development condition, the site has been analyzed as five subcatchment basins (E1, E2, E3, E4, and E5) based on localized topography and discharge location. Subcatchment E1 contains all the proposed development area and most of the existing development, and drains to the west of the north "arm" of the lot. Subcatchment E2 contains a minor amount of developed area and drains to the east of the north arm of the lot. Subcatchment E3 drains south to Beards Creek running through the middle of the lot and then to the east. Subcatchment E4 is a small area diverted from subcatchment E3, which drains to the east. Subcatchment E5 forms the entire southern "arm" of the property, which drains to the north in the direction of Beards Creek. E5 contains some development in the form of electrical lines, but that land use is not expected to change the impervious area in the analysis, and will not be altered by the proposed development.

Table 1: Pre-Development Watershed Basin Summary

Watershed Basin ID	Basin Area (SF)	Tc (MIN)	CN	10-Year Runoff (CFS)	25-Year Runoff (CFS)	50-Year Runoff (CFS)	To Design Point
E1	295,488	19.0	60	7.75	13.94	20.42	DP1
E2	15,070	5.5	75	1.36	1.98	2.57	DP1
E3	232,162	58.3	58	2.35	4.51	6.82	DP1
E4	371	5.0	55	0.01	0.02	0.03	DP1
E5	1,032,671	24.0	68	38.00	60.48	82.84	DP1

POST-DEVELOPMENT DRAINAGE

The proposed development has been designed to match the pre-development drainage patterns to the greatest extent feasible. In the post-development condition, the site has been analyzed as six major watershed basins, (P1a, P1b, P2, P3, P4, and P5). Since the design of the future houses is currently conceptual, some assumptions were made regarding the delineation of watershed basins and the determination of land usage. The delineation between Basins P2, P3, P4 and P5 correspond to approximately the same as the delineation between E2, E3, E4 and E5, respectively. Subcatchments P1a and P1b were subdivided from subcatchment P1, to represent the distinction between relatively unchanged land in P1a, and proposed development in P1b.

Subcatchments P1a, P1b, and P2 are the only lots with any expected change from the proposed development.

Subcatchment P1a contains a significant increase in impervious area, and as such, will be detained in a detention pond, and released with an outlet control structure. In the event of a 100-year storm event or an outlet control structure failure, an emergency bypass was designed to release stormwater. Since all subcatchments ultimately flow to Beards Creek, the creek will serve as the considered discharge point for the entire property.

Table 2: Post-Development Watershed Basin Summary

Watershed Basin ID	Basin Area (SF)	Tc (MIN)	CN	10-Year Runoff (CFS)	25-Year Runoff (CFS)	50-Year Runoff (CFS)	Design Point
P1a	214,195	19.0	58	4.82	9.06	13.52	DP1
P1b	83,653	6.9	81	8.82	12.28	15.51	DP1
P2	13,441	5.5	66	0.83	1.32	1.81	DP1
P3	231,924	58.3	58	2.35	4.50	6.81	DP1
P4	382	5.0	55	0.01	0.02	0.03	DP1
P5	1,032,212	24.0	70	38.00	60.48	82.80	DP1

The overall impervious coverage of the area analyzed in this report for all basins **increases** from 0.704 acres (1.95%) in the pre-development condition to 1.238 acres (3.42%) in the post-development condition. Since the site represents an increase in impervious area, the project proposes the construction of a detention pond to reduce the peak flow discharge from the site. Table 3 shows a summary of the comparison between pre-developed flows and post-developed flows for the design point in Beards Creek (DP1). The comparison considers the reduced flows as a result of infiltration.

Table 3: Pre-Development to Post-Development Comparison

	Q2 (CFS)		Q10 (CFS)		Q25 (CFS)		Q50 (CFS)		
Design Point	**Pre**	**Post**	**Pre**	**Post**	**Pre**	**Post**	**Pre**	**Post**	**Description**
DP1	15.49	15.21	46.17	45.28	75.59	74.37	105.15	103.72	Beards Creek

CONCLUSION

The proposed development has been designed to match the pre-development drainage patterns to the greatest extent feasible. With the design of the holding pond, the post-development runoff rates are reduced to be below the pre-development runoff rates. Erosion and sediment control practices will be implemented for both the temporary condition during construction and for final stabilization after construction. Therefore, there are no negative impacts to downstream receptors or adjacent properties anticipated as a result of this project.

REFERENCES

1. Comprehensive Environmental Inc. and New Hampshire Department of Environmental Services. *New Hampshire Stormwater Manual (Volumes 1, 2 and 3)*, December 2008 (Revision 1.0).
2. Minnick, E.L. and H.T. Marshall. *Stormwater Management and Erosion and Sediment Control Handbook for Urban and Developing Areas in New Hampshire*, prepared by Rockingham County Conservation District, prepared for New Hampshire Department of Environmental Services, in cooperation with USDA Soil Conservation Service, August 1992.
3. HydroCAD Software Solution, LLC. *HydroCAD Stormwater Modeling System Version 10.0* copyright 2013.

APPENDIX A

VICINITY (TAX) MAP

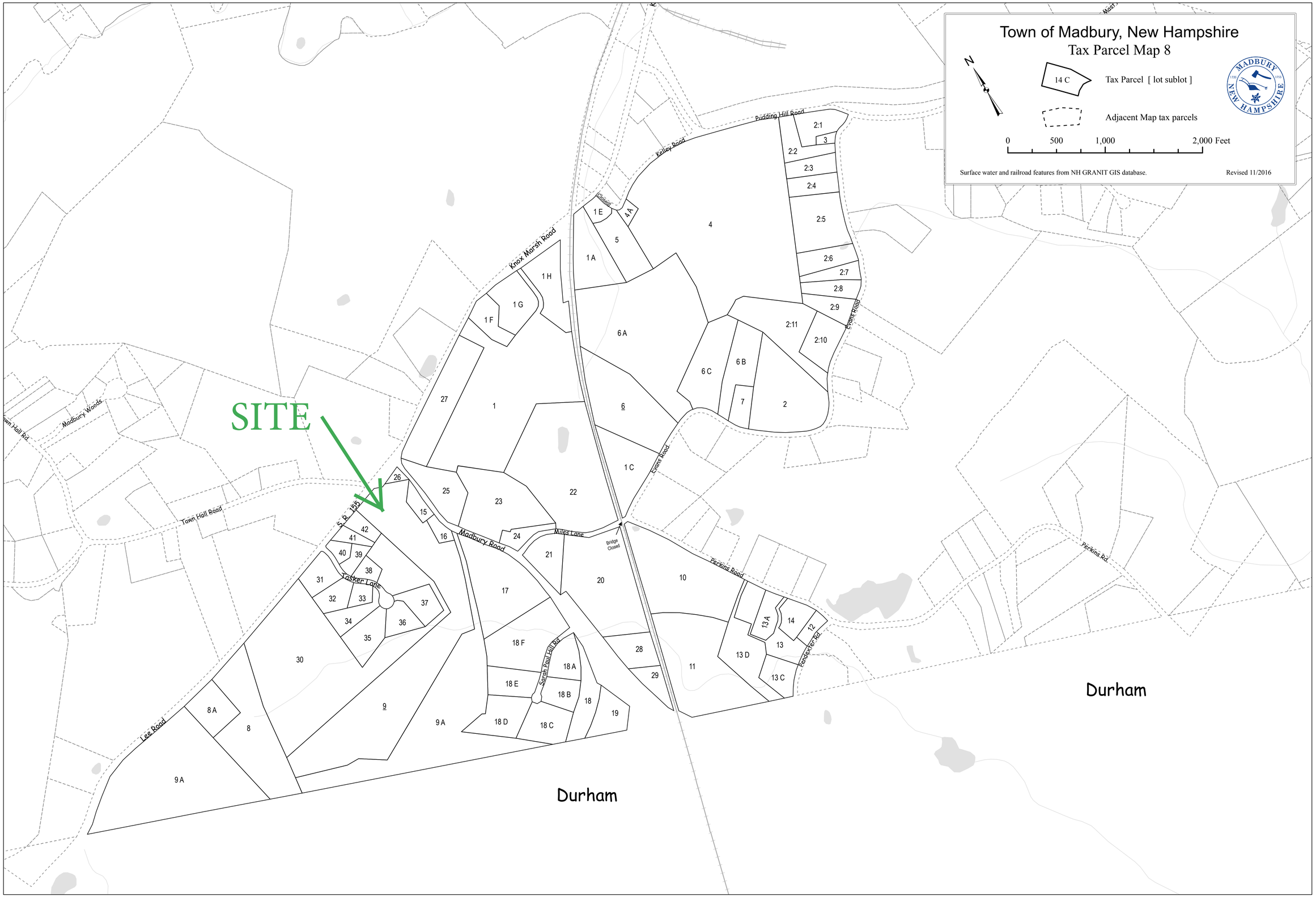

Town of Madbury, New Hampshire
Tax Parcel Map 8
14 C
Tax Parcel [lot sublot]
Adjacent Map tax parcels
0
500
1,000
2,000 Feet
Surface water and railroad features from NH GRANIT GIS database.
Revised 11/2016
SITE
Durham
Durham
Pudding Hill Road
Kelley Road
Knox Marsh Road
Evans Road
Madbury Woods
Town Hall Road
S.R. 155
Madbury Road
Miles Lane
Bridge Closed
Perkins Road
Perkins Rd.
Pendexter Rd.
Tasker Lane
Sarah Paul Hill Rd.
Lee Road

APPENDIX B

TABLES, CHARTS, ETC.

Extreme Precipitation Tables

Northeast Regional Climate Center

Data represents point estimates calculated from partial duration series. All precipitation amounts are displayed in inches.

Smoothing	Yes
State	New Hampshire
Location	
Longitude	70.937 degrees West
Latitude	43.165 degrees North
Elevation	0 feet
Date/Time	Thu, 01 Oct 2020 13:49:10 -0400

Extreme Precipitation Estimates

	5min	10min	15min	30min	60min	120min		1hr	2hr	3hr	6hr	12hr	24hr	48hr		1day	2day	4day	7day	10day	
1yr	0.26	0.40	0.50	0.65	0.81	1.03	**1yr**	0.70	0.98	1.20	1.54	1.99	2.59	2.84	**1yr**	2.30	2.73	3.13	3.85	4.43	**1yr**
2yr	0.32	0.49	0.61	0.81	1.01	1.28	**2yr**	0.87	1.17	1.49	1.90	2.43	3.12	3.46	**2yr**	2.76	3.33	3.83	4.56	5.19	**2yr**
5yr	0.37	0.57	0.71	0.96	1.22	1.57	**5yr**	1.06	1.44	1.85	2.37	3.06	3.95	4.44	**5yr**	3.50	4.27	4.88	5.76	6.52	**5yr**
10yr	0.40	0.63	0.80	1.09	1.41	1.84	**10yr**	1.22	1.69	2.17	2.81	3.64	4.72	5.35	**10yr**	4.18	5.15	5.87	6.88	7.75	**10yr**
25yr	0.46	0.73	0.94	1.29	1.72	2.26	**25yr**	1.48	2.09	2.68	3.51	4.59	5.98	6.87	**25yr**	5.29	6.61	7.49	8.71	9.75	**25yr**
50yr	0.51	0.82	1.06	1.48	1.99	2.65	**50yr**	1.72	2.45	3.17	4.17	5.47	7.15	8.30	**50yr**	6.33	7.98	9.02	10.41	11.60	**50yr**
100yr	0.58	0.93	1.20	1.70	2.31	3.11	**100yr**	1.99	2.88	3.73	4.94	6.51	8.55	10.03	**100yr**	7.57	9.64	10.85	12.45	13.81	**100yr**
200yr	0.64	1.04	1.35	1.94	2.68	3.65	**200yr**	2.32	3.39	4.40	5.87	7.77	10.24	12.12	**200yr**	9.06	11.66	13.07	14.90	16.45	**200yr**
500yr	0.75	1.23	1.61	2.34	3.28	4.51	**500yr**	2.83	4.20	5.47	7.34	9.79	12.99	15.58	**500yr**	11.50	14.98	16.71	18.90	20.75	**500yr**

Lower Confidence Limits

	5min	10min	15min	30min	60min	120min		1hr	2hr	3hr	6hr	12hr	24hr	48hr		1day	2day	4day	7day	10day	
1yr	0.24	0.37	0.45	0.60	0.74	0.90	**1yr**	0.64	0.88	0.91	1.24	1.54	1.98	2.50	**1yr**	1.75	2.41	2.95	3.33	4.06	**1yr**
2yr	0.32	0.49	0.60	0.81	1.00	1.18	**2yr**	0.86	1.15	1.36	1.83	2.36	3.04	3.37	**2yr**	2.69	3.25	3.72	4.44	5.06	**2yr**
5yr	0.35	0.54	0.67	0.92	1.16	1.40	**5yr**	1.01	1.37	1.62	2.15	2.79	3.70	4.11	**5yr**	3.27	3.96	4.57	5.40	6.10	**5yr**
10yr	0.38	0.59	0.73	1.02	1.32	1.60	**10yr**	1.14	1.57	1.82	2.45	3.14	4.26	4.78	**10yr**	3.77	4.60	5.31	6.25	7.02	**10yr**
25yr	0.44	0.67	0.83	1.19	1.56	1.92	**25yr**	1.35	1.87	2.12	2.86	3.68	5.10	5.82	**25yr**	4.52	5.59	6.49	7.59	8.46	**25yr**
50yr	0.48	0.74	0.92	1.32	1.78	2.20	**50yr**	1.53	2.15	2.36	3.22	4.14	5.87	6.73	**50yr**	5.19	6.47	7.56	8.79	9.72	**50yr**
100yr	0.54	0.82	1.03	1.48	2.03	2.52	**100yr**	1.76	2.47	2.64	3.61	4.63	6.74	7.79	**100yr**	5.97	7.49	8.82	10.17	11.15	**100yr**
200yr	0.60	0.91	1.15	1.66	2.32	2.89	**200yr**	2.00	2.82	2.94	4.04	5.19	7.74	9.02	**200yr**	6.85	8.67	10.29	11.78	12.81	**200yr**
500yr	0.71	1.05	1.35	1.96	2.79	3.48	**500yr**	2.41	3.40	3.41	4.69	6.06	9.25	10.92	**500yr**	8.19	10.50	12.62	14.32	15.32	**500yr**

Upper Confidence Limits

	5min	10min	15min	30min	60min	120min		1hr	2hr	3hr	6hr	12hr	24hr	48hr		1day	2day	4day	7day	10day	
1yr	0.28	0.43	0.53	0.71	0.87	1.08	**1yr**	0.75	1.05	1.24	1.74	2.21	2.79	3.02	**1yr**	2.47	2.91	3.33	4.14	4.73	**1yr**
2yr	0.33	0.50	0.62	0.84	1.04	1.24	**2yr**	0.90	1.22	1.47	1.95	2.50	3.22	3.56	**2yr**	2.85	3.43	3.93	4.69	5.35	**2yr**
5yr	0.39	0.60	0.75	1.03	1.31	1.58	**5yr**	1.13	1.54	1.85	2.49	3.18	4.20	4.75	**5yr**	3.72	4.57	5.21	6.13	6.90	**5yr**
10yr	0.45	0.70	0.87	1.21	1.56	1.91	**10yr**	1.35	1.87	2.22	3.03	3.82	5.17	5.92	**10yr**	4.58	5.69	6.47	7.52	8.40	**10yr**
25yr	0.55	0.84	1.04	1.49	1.96	2.46	**25yr**	1.69	2.41	2.86	3.94	4.90	6.85	7.92	**25yr**	6.07	7.62	8.59	9.89	10.94	**25yr**
50yr	0.64	0.97	1.20	1.73	2.33	2.97	**50yr**	2.01	2.90	3.47	4.79	5.93	8.45	9.89	**50yr**	7.48	9.51	10.65	12.14	13.37	**50yr**
100yr	0.74	1.12	1.40	2.02	2.77	3.58	**100yr**	2.39	3.50	4.20	5.85	7.19	10.43	12.36	**100yr**	9.23	11.88	13.20	14.94	16.36	**100yr**
200yr	0.85	1.28	1.63	2.35	3.28	4.34	**200yr**	2.83	4.24	5.10	7.15	8.71	12.91	15.46	**200yr**	11.42	14.87	16.37	18.36	20.04	**200yr**
500yr	1.04	1.54	1.99	2.89	4.11	5.57	**500yr**	3.54	5.44	6.58	9.35	11.23	17.15	20.78	**500yr**	15.18	19.98	21.76	24.16	26.23	**500yr**

Powered by ACIS Northeast Regional Climate Center

APPENDIX C

HYDROCAD DRAINAGE

ANALYSIS CALCULATIONS

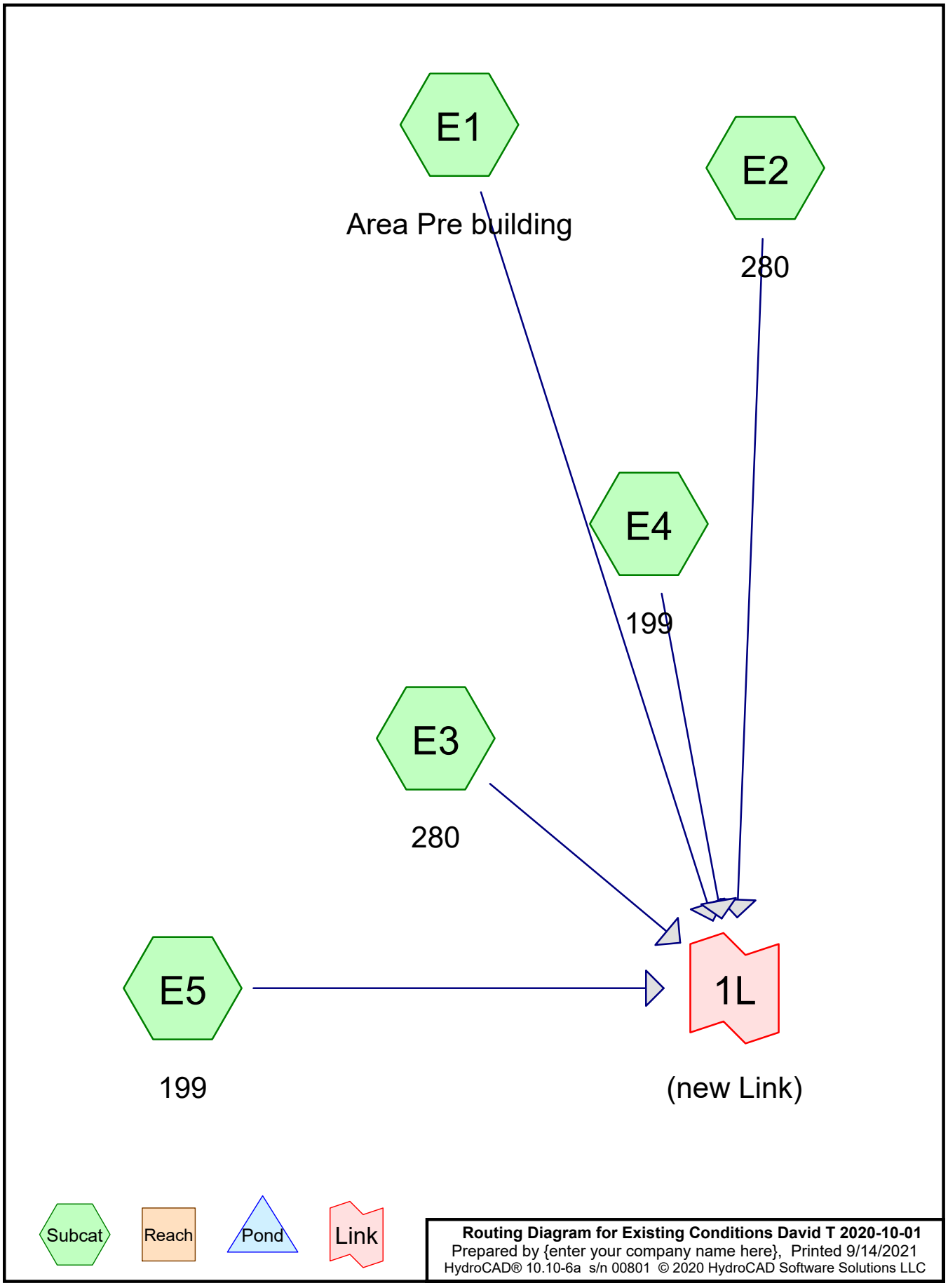

Routing Diagram for Existing Conditions David T 2020-10-01
Prepared by {enter your company name here}, Printed 9/14/2021
HydroCAD® 10.10-6a s/n 00801 © 2020 HydroCAD Software Solutions LLC

Project Notes

Defined 9 rainfall events from Extreme Precipitation IDF

Rainfall Events Listing (selected events)

Event#	Event Name	Storm Type	Curve	Mode	Duration (hours)	B/B	Depth (inches)	AMC
1	2-yr	Type II 24-hr		Default	24.00	1	3.12	2
2	10-yr	Type II 24-hr		Default	24.00	1	4.72	2
3	25-yr	Type II 24-hr		Default	24.00	1	5.98	2
4	50-yr	Type II 24-hr		Default	24.00	1	7.15	2

Area Listing (all nodes)

Area (acres)	CN	Description (subcatchment-numbers)
1.854	75	1/4 acre lots, 38% imp, HSG B (E1, E2)
1.178	61	>75% Grass cover, Good, HSG B (E1)
8.551	65	Brush, Good, HSG C (E5)
0.208	98	Water Surface, 0% imp, HSG B (E3, E5)
0.923	98	Water Surface, 0% imp, HSG D (E3, E5)
11.878	55	Woods, Good, HSG B (E1, E3, E4, E5)
9.753	70	Woods, Good, HSG C (E5)
1.830	77	Woods, Good, HSG D (E3, E5)
36.175	**65**	**TOTAL AREA**

Soil Listing (all nodes)

Area (acres)	Soil Group	Subcatchment Numbers
0.000	HSG A	
15.118	HSG B	E1, E2, E3, E4, E5
18.304	HSG C	E5
2.752	HSG D	E3, E5
0.000	Other	
36.175		**TOTAL AREA**

Ground Covers (all nodes)

HSG-A (acres)	HSG-B (acres)	HSG-C (acres)	HSG-D (acres)	Other (acres)	Total (acres)	Ground Cover	Subcatchment Numbers
0.000	1.854	0.000	0.000	0.000	1.854	1/4 acre lots, 38% imp	E1, E2
0.000	1.178	0.000	0.000	0.000	1.178	>75% Grass cover, Good	E1
0.000	0.000	8.551	0.000	0.000	8.551	Brush, Good	E5
0.000	0.208	0.000	0.923	0.000	1.131	Water Surface, 0% imp	E3, E5
0.000	11.878	9.753	1.830	0.000	23.460	Woods, Good	E1, E3, E4, E5
0.000	**15.118**	**18.304**	**2.752**	**0.000**	**36.175**	**TOTAL AREA**	

Time span=5.00-20.00 hrs, dt=0.05 hrs, 301 points
Runoff by SCS TR-20 method, UH=SCS, Weighted-CN
Reach routing by Stor-Ind+Trans method - Pond routing by Stor-Ind method

Subcatchment E1: Area Pre building Runoff Area=295,488 sf 8.45% Impervious Runoff Depth>0.32"
Flow Length=957' Slope=0.0785 '/' Tc=19.0 min CN=60 Runoff=1.75 cfs 0.180 af

Subcatchment E2: 280 Runoff Area=15,070 sf 38.00% Impervious Runoff Depth>0.94"
Flow Length=299' Slope=0.0642 '/' Tc=5.5 min CN=75 Runoff=0.63 cfs 0.027 af

Subcatchment E3: 280 Runoff Area=232,162 sf 0.00% Impervious Runoff Depth>0.25"
Flow Length=997' Slope=0.0098 '/' Tc=58.3 min CN=58 Runoff=0.48 cfs 0.112 af

Subcatchment E4: 199 Runoff Area=371 sf 0.00% Impervious Runoff Depth>0.19"
Tc=5.0 min CN=55 Runoff=0.00 cfs 0.000 af

Subcatchment E5: 199 Runoff Area=1,032,671 sf 0.00% Impervious Runoff Depth>0.60"
Flow Length=940' Slope=0.0314 '/' Tc=24.0 min CN=68 Runoff=13.60 cfs 1.193 af

Link 1L: (new Link) below 1,000.00 cfs Inflow=15.49 cfs 1.512 af
Primary=15.49 cfs 1.512 af Secondary=0.00 cfs 0.000 af

Total Runoff Area = 36.175 ac Runoff Volume = 1.512 af Average Runoff Depth = 0.50"
98.05% Pervious = 35.470 ac 1.95% Impervious = 0.704 ac

Summary for Subcatchment E1: Area Pre building

Runoff = 1.75 cfs @ 12.17 hrs, Volume= 0.180 af, Depth> 0.32"
Routed to Link 1L : (new Link)

Runoff by SCS TR-20 method, UH=SCS, Weighted-CN, Time Span= 5.00-20.00 hrs, dt= 0.05 hrs
Type II 24-hr 2-yr Rainfall=3.12"

Area (sf)	CN	Description
178,480	55	Woods, Good, HSG B
51,330	61	>75% Grass cover, Good, HSG B
65,678	75	1/4 acre lots, 38% imp, HSG B
295,488	60	Weighted Average
270,530		91.55% Pervious Area
24,958		8.45% Impervious Area

Tc (min)	Length (feet)	Slope (ft/ft)	Velocity (ft/sec)	Capacity (cfs)	Description
19.0	957	0.0785	0.84		**Lag/CN Method,**

Summary for Subcatchment E2: 280

[49] Hint: Tc<2dt may require smaller dt

Runoff = 0.63 cfs @ 11.97 hrs, Volume= 0.027 af, Depth> 0.94"
Routed to Link 1L : (new Link)

Runoff by SCS TR-20 method, UH=SCS, Weighted-CN, Time Span= 5.00-20.00 hrs, dt= 0.05 hrs
Type II 24-hr 2-yr Rainfall=3.12"

Area (sf)	CN	Description
15,070	75	1/4 acre lots, 38% imp, HSG B
9,343		62.00% Pervious Area
5,727		38.00% Impervious Area

Tc (min)	Length (feet)	Slope (ft/ft)	Velocity (ft/sec)	Capacity (cfs)	Description
5.5	299	0.0642	0.90		**Lag/CN Method,**

Summary for Subcatchment E3: 280

Runoff = 0.48 cfs @ 12.83 hrs, Volume= 0.112 af, Depth> 0.25"
Routed to Link 1L : (new Link)

Runoff by SCS TR-20 method, UH=SCS, Weighted-CN, Time Span= 5.00-20.00 hrs, dt= 0.05 hrs
Type II 24-hr 2-yr Rainfall=3.12"

Area (sf)	CN	Description
214,851	55	Woods, Good, HSG B
6,000	77	Woods, Good, HSG D
9,006	98	Water Surface, 0% imp, HSG B
2,305	98	Water Surface, 0% imp, HSG D
232,162	58	Weighted Average
232,162		100.00% Pervious Area

Tc (min)	Length (feet)	Slope (ft/ft)	Velocity (ft/sec)	Capacity (cfs)	Description
58.3	997	0.0098	0.28		**Lag/CN Method,**

Summary for Subcatchment E4: 199

[49] Hint: Tc<2dt may require smaller dt

Runoff = 0.00 cfs @ 12.01 hrs, Volume= 0.000 af, Depth> 0.19"
Routed to Link 1L : (new Link)

Runoff by SCS TR-20 method, UH=SCS, Weighted-CN, Time Span= 5.00-20.00 hrs, dt= 0.05 hrs
Type II 24-hr 2-yr Rainfall=3.12"

Area (sf)	CN	Description
371	55	Woods, Good, HSG B
371		100.00% Pervious Area

Tc (min)	Length (feet)	Slope (ft/ft)	Velocity (ft/sec)	Capacity (cfs)	Description
5.0					**Direct Entry,**

Summary for Subcatchment E5: 199

Runoff = 13.60 cfs @ 12.21 hrs, Volume= 1.193 af, Depth> 0.60"
Routed to Link 1L : (new Link)

Runoff by SCS TR-20 method, UH=SCS, Weighted-CN, Time Span= 5.00-20.00 hrs, dt= 0.05 hrs
Type II 24-hr 2-yr Rainfall=3.12"

Area (sf)	CN	Description
123,694	55	Woods, Good, HSG B
424,841	70	Woods, Good, HSG C
73,698	77	Woods, Good, HSG D
372,497	65	Brush, Good, HSG C
59	98	Water Surface, 0% imp, HSG B
37,882	98	Water Surface, 0% imp, HSG D
1,032,671	68	Weighted Average
1,032,671		100.00% Pervious Area

Tc (min)	Length (feet)	Slope (ft/ft)	Velocity (ft/sec)	Capacity (cfs)	Description
24.0	940	0.0314	0.65		**Lag/CN Method,**

Summary for Link 1L: (new Link)

Inflow Area = 36.175 ac, 1.95% Impervious, Inflow Depth > 0.50" for 2-yr event
Inflow = 15.49 cfs @ 12.20 hrs, Volume= 1.512 af
Primary = 15.49 cfs @ 12.20 hrs, Volume= 1.512 af, Atten= 0%, Lag= 0.0 min
Secondary = 0.00 cfs @ 5.00 hrs, Volume= 0.000 af

Primary outflow = Inflow below 1,000.00 cfs, Time Span= 5.00-20.00 hrs, dt= 0.05 hrs

Time span=5.00-20.00 hrs, dt=0.05 hrs, 301 points
Runoff by SCS TR-20 method, UH=SCS, Weighted-CN
Reach routing by Stor-Ind+Trans method - Pond routing by Stor-Ind method

Subcatchment E1: Area Pre building Runoff Area=295,488 sf 8.45% Impervious Runoff Depth>1.01"
Flow Length=957' Slope=0.0785 '/' Tc=19.0 min CN=60 Runoff=7.75 cfs 0.569 af

Subcatchment E2: 280 Runoff Area=15,070 sf 38.00% Impervious Runoff Depth>2.04"
Flow Length=299' Slope=0.0642 '/' Tc=5.5 min CN=75 Runoff=1.36 cfs 0.059 af

Subcatchment E3: 280 Runoff Area=232,162 sf 0.00% Impervious Runoff Depth>0.87"
Flow Length=997' Slope=0.0098 '/' Tc=58.3 min CN=58 Runoff=2.35 cfs 0.387 af

Subcatchment E4: 199 Runoff Area=371 sf 0.00% Impervious Runoff Depth>0.74"
Tc=5.0 min CN=55 Runoff=0.01 cfs 0.001 af

Subcatchment E5: 199 Runoff Area=1,032,671 sf 0.00% Impervious Runoff Depth>1.51"
Flow Length=940' Slope=0.0314 '/' Tc=24.0 min CN=68 Runoff=38.00 cfs 2.989 af

Link 1L: (new Link) below 1,000.00 cfs Inflow=46.17 cfs 4.005 af
Primary=46.17 cfs 4.005 af Secondary=0.00 cfs 0.000 af

Total Runoff Area = 36.175 ac Runoff Volume = 4.005 af Average Runoff Depth = 1.33"
98.05% Pervious = 35.470 ac 1.95% Impervious = 0.704 ac

Summary for Subcatchment E1: Area Pre building

Runoff = 7.75 cfs @ 12.14 hrs, Volume= 0.569 af, Depth> 1.01"
Routed to Link 1L : (new Link)

Runoff by SCS TR-20 method, UH=SCS, Weighted-CN, Time Span= 5.00-20.00 hrs, dt= 0.05 hrs
Type II 24-hr 10-yr Rainfall=4.72"

Area (sf)	CN	Description
178,480	55	Woods, Good, HSG B
51,330	61	>75% Grass cover, Good, HSG B
65,678	75	1/4 acre lots, 38% imp, HSG B
295,488	60	Weighted Average
270,530		91.55% Pervious Area
24,958		8.45% Impervious Area

Tc (min)	Length (feet)	Slope (ft/ft)	Velocity (ft/sec)	Capacity (cfs)	Description
19.0	957	0.0785	0.84		**Lag/CN Method,**

Summary for Subcatchment E2: 280

[49] Hint: Tc<2dt may require smaller dt

Runoff = 1.36 cfs @ 11.97 hrs, Volume= 0.059 af, Depth> 2.04"
Routed to Link 1L : (new Link)

Runoff by SCS TR-20 method, UH=SCS, Weighted-CN, Time Span= 5.00-20.00 hrs, dt= 0.05 hrs
Type II 24-hr 10-yr Rainfall=4.72"

Area (sf)	CN	Description
15,070	75	1/4 acre lots, 38% imp, HSG B
9,343		62.00% Pervious Area
5,727		38.00% Impervious Area

Tc (min)	Length (feet)	Slope (ft/ft)	Velocity (ft/sec)	Capacity (cfs)	Description
5.5	299	0.0642	0.90		**Lag/CN Method,**

Summary for Subcatchment E3: 280

Runoff = 2.35 cfs @ 12.69 hrs, Volume= 0.387 af, Depth> 0.87"
Routed to Link 1L : (new Link)

Runoff by SCS TR-20 method, UH=SCS, Weighted-CN, Time Span= 5.00-20.00 hrs, dt= 0.05 hrs
Type II 24-hr 10-yr Rainfall=4.72"

Area (sf)	CN	Description
214,851	55	Woods, Good, HSG B
6,000	77	Woods, Good, HSG D
9,006	98	Water Surface, 0% imp, HSG B
2,305	98	Water Surface, 0% imp, HSG D
232,162	58	Weighted Average
232,162		100.00% Pervious Area

Tc (min)	Length (feet)	Slope (ft/ft)	Velocity (ft/sec)	Capacity (cfs)	Description
58.3	997	0.0098	0.28		**Lag/CN Method,**

Summary for Subcatchment E4: 199

[49] Hint: Tc<2dt may require smaller dt

Runoff = 0.01 cfs @ 11.98 hrs, Volume= 0.001 af, Depth> 0.74"
Routed to Link 1L : (new Link)

Runoff by SCS TR-20 method, UH=SCS, Weighted-CN, Time Span= 5.00-20.00 hrs, dt= 0.05 hrs
Type II 24-hr 10-yr Rainfall=4.72"

Area (sf)	CN	Description
371	55	Woods, Good, HSG B
371		100.00% Pervious Area

Tc (min)	Length (feet)	Slope (ft/ft)	Velocity (ft/sec)	Capacity (cfs)	Description
5.0					**Direct Entry,**

Summary for Subcatchment E5: 199

Runoff = 38.00 cfs @ 12.19 hrs, Volume= 2.989 af, Depth> 1.51"
Routed to Link 1L : (new Link)

Runoff by SCS TR-20 method, UH=SCS, Weighted-CN, Time Span= 5.00-20.00 hrs, dt= 0.05 hrs
Type II 24-hr 10-yr Rainfall=4.72"

Area (sf)	CN	Description
123,694	55	Woods, Good, HSG B
424,841	70	Woods, Good, HSG C
73,698	77	Woods, Good, HSG D
372,497	65	Brush, Good, HSG C
59	98	Water Surface, 0% imp, HSG B
37,882	98	Water Surface, 0% imp, HSG D
1,032,671	68	Weighted Average
1,032,671		100.00% Pervious Area

Tc (min)	Length (feet)	Slope (ft/ft)	Velocity (ft/sec)	Capacity (cfs)	Description
24.0	940	0.0314	0.65		**Lag/CN Method,**

Summary for Link 1L: (new Link)

Inflow Area = 36.175 ac, 1.95% Impervious, Inflow Depth > 1.33" for 10-yr event
Inflow = 46.17 cfs @ 12.18 hrs, Volume= 4.005 af
Primary = 46.17 cfs @ 12.18 hrs, Volume= 4.005 af, Atten= 0%, Lag= 0.0 min
Secondary = 0.00 cfs @ 5.00 hrs, Volume= 0.000 af

Primary outflow = Inflow below 1,000.00 cfs, Time Span= 5.00-20.00 hrs, dt= 0.05 hrs

Time span=5.00-20.00 hrs, dt=0.05 hrs, 301 points
Runoff by SCS TR-20 method, UH=SCS, Weighted-CN
Reach routing by Stor-Ind+Trans method - Pond routing by Stor-Ind method

Subcatchment E1: Area Pre building Runoff Area=295,488 sf 8.45% Impervious Runoff Depth>1.71"
Flow Length=957' Slope=0.0785 '/' Tc=19.0 min CN=60 Runoff=13.94 cfs 0.967 af

Subcatchment E2: 280 Runoff Area=15,070 sf 38.00% Impervious Runoff Depth>3.02"
Flow Length=299' Slope=0.0642 '/' Tc=5.5 min CN=75 Runoff=1.98 cfs 0.087 af

Subcatchment E3: 280 Runoff Area=232,162 sf 0.00% Impervious Runoff Depth>1.52"
Flow Length=997' Slope=0.0098 '/' Tc=58.3 min CN=58 Runoff=4.51 cfs 0.677 af

Subcatchment E4: 199 Runoff Area=371 sf 0.00% Impervious Runoff Depth>1.34"
Tc=5.0 min CN=55 Runoff=0.02 cfs 0.001 af

Subcatchment E5: 199 Runoff Area=1,032,671 sf 0.00% Impervious Runoff Depth>2.37"
Flow Length=940' Slope=0.0314 '/' Tc=24.0 min CN=68 Runoff=60.48 cfs 4.675 af

Link 1L: (new Link) below 1,000.00 cfs Inflow=75.59 cfs 6.406 af
Primary=75.59 cfs 6.406 af Secondary=0.00 cfs 0.000 af

Total Runoff Area = 36.175 ac Runoff Volume = 6.406 af Average Runoff Depth = 2.13"
98.05% Pervious = 35.470 ac 1.95% Impervious = 0.704 ac

Summary for Subcatchment E1: Area Pre building

Runoff = 13.94 cfs @ 12.13 hrs, Volume= 0.967 af, Depth> 1.71"
Routed to Link 1L : (new Link)

Runoff by SCS TR-20 method, UH=SCS, Weighted-CN, Time Span= 5.00-20.00 hrs, dt= 0.05 hrs
Type II 24-hr 25-yr Rainfall=5.98"

Area (sf)	CN	Description
178,480	55	Woods, Good, HSG B
51,330	61	>75% Grass cover, Good, HSG B
65,678	75	1/4 acre lots, 38% imp, HSG B
295,488	60	Weighted Average
270,530		91.55% Pervious Area
24,958		8.45% Impervious Area

Tc (min)	Length (feet)	Slope (ft/ft)	Velocity (ft/sec)	Capacity (cfs)	Description
19.0	957	0.0785	0.84		**Lag/CN Method,**

Summary for Subcatchment E2: 280

[49] Hint: Tc<2dt may require smaller dt

Runoff = 1.98 cfs @ 11.96 hrs, Volume= 0.087 af, Depth> 3.02"
Routed to Link 1L : (new Link)

Runoff by SCS TR-20 method, UH=SCS, Weighted-CN, Time Span= 5.00-20.00 hrs, dt= 0.05 hrs
Type II 24-hr 25-yr Rainfall=5.98"

Area (sf)	CN	Description
15,070	75	1/4 acre lots, 38% imp, HSG B
9,343		62.00% Pervious Area
5,727		38.00% Impervious Area

Tc (min)	Length (feet)	Slope (ft/ft)	Velocity (ft/sec)	Capacity (cfs)	Description
5.5	299	0.0642	0.90		**Lag/CN Method,**

Summary for Subcatchment E3: 280

Runoff = 4.51 cfs @ 12.66 hrs, Volume= 0.677 af, Depth> 1.52"
Routed to Link 1L : (new Link)

Runoff by SCS TR-20 method, UH=SCS, Weighted-CN, Time Span= 5.00-20.00 hrs, dt= 0.05 hrs
Type II 24-hr 25-yr Rainfall=5.98"

Area (sf)	CN	Description
214,851	55	Woods, Good, HSG B
6,000	77	Woods, Good, HSG D
9,006	98	Water Surface, 0% imp, HSG B
2,305	98	Water Surface, 0% imp, HSG D
232,162	58	Weighted Average
232,162		100.00% Pervious Area

Tc (min)	Length (feet)	Slope (ft/ft)	Velocity (ft/sec)	Capacity (cfs)	Description
58.3	997	0.0098	0.28		**Lag/CN Method,**

Summary for Subcatchment E4: 199

[49] Hint: Tc<2dt may require smaller dt

Runoff = 0.02 cfs @ 11.97 hrs, Volume= 0.001 af, Depth> 1.34"
Routed to Link 1L : (new Link)

Runoff by SCS TR-20 method, UH=SCS, Weighted-CN, Time Span= 5.00-20.00 hrs, dt= 0.05 hrs
Type II 24-hr 25-yr Rainfall=5.98"

Area (sf)	CN	Description
371	55	Woods, Good, HSG B
371		100.00% Pervious Area

Tc (min)	Length (feet)	Slope (ft/ft)	Velocity (ft/sec)	Capacity (cfs)	Description
5.0					**Direct Entry,**

Summary for Subcatchment E5: 199

Runoff = 60.48 cfs @ 12.18 hrs, Volume= 4.675 af, Depth> 2.37"
Routed to Link 1L : (new Link)

Runoff by SCS TR-20 method, UH=SCS, Weighted-CN, Time Span= 5.00-20.00 hrs, dt= 0.05 hrs
Type II 24-hr 25-yr Rainfall=5.98"

Area (sf)	CN	Description
123,694	55	Woods, Good, HSG B
424,841	70	Woods, Good, HSG C
73,698	77	Woods, Good, HSG D
372,497	65	Brush, Good, HSG C
59	98	Water Surface, 0% imp, HSG B
37,882	98	Water Surface, 0% imp, HSG D
1,032,671	68	Weighted Average
1,032,671		100.00% Pervious Area

Tc (min)	Length (feet)	Slope (ft/ft)	Velocity (ft/sec)	Capacity (cfs)	Description
24.0	940	0.0314	0.65		**Lag/CN Method,**

Summary for Link 1L: (new Link)

Inflow Area = 36.175 ac, 1.95% Impervious, Inflow Depth > 2.13" for 25-yr event
Inflow = 75.59 cfs @ 12.17 hrs, Volume= 6.406 af
Primary = 75.59 cfs @ 12.17 hrs, Volume= 6.406 af, Atten= 0%, Lag= 0.0 min
Secondary = 0.00 cfs @ 5.00 hrs, Volume= 0.000 af

Primary outflow = Inflow below 1,000.00 cfs, Time Span= 5.00-20.00 hrs, dt= 0.05 hrs

Time span=5.00-20.00 hrs, dt=0.05 hrs, 301 points
Runoff by SCS TR-20 method, UH=SCS, Weighted-CN
Reach routing by Stor-Ind+Trans method - Pond routing by Stor-Ind method

Subcatchment E1: Area Pre building Runoff Area=295,488 sf 8.45% Impervious Runoff Depth>2.45"
Flow Length=957' Slope=0.0785 '/' Tc=19.0 min CN=60 Runoff=20.42 cfs 1.385 af

Subcatchment E2: 280 Runoff Area=15,070 sf 38.00% Impervious Runoff Depth>3.97"
Flow Length=299' Slope=0.0642 '/' Tc=5.5 min CN=75 Runoff=2.57 cfs 0.115 af

Subcatchment E3: 280 Runoff Area=232,162 sf 0.00% Impervious Runoff Depth>2.22"
Flow Length=997' Slope=0.0098 '/' Tc=58.3 min CN=58 Runoff=6.82 cfs 0.986 af

Subcatchment E4: 199 Runoff Area=371 sf 0.00% Impervious Runoff Depth>2.00"
Tc=5.0 min CN=55 Runoff=0.03 cfs 0.001 af

Subcatchment E5: 199 Runoff Area=1,032,671 sf 0.00% Impervious Runoff Depth>3.23"
Flow Length=940' Slope=0.0314 '/' Tc=24.0 min CN=68 Runoff=82.84 cfs 6.377 af

Link 1L: (new Link) below 1,000.00 cfs Inflow=105.15 cfs 8.863 af
Primary=105.15 cfs 8.863 af Secondary=0.00 cfs 0.000 af

Total Runoff Area = 36.175 ac Runoff Volume = 8.863 af Average Runoff Depth = 2.94"
98.05% Pervious = 35.470 ac 1.95% Impervious = 0.704 ac

Summary for Subcatchment E1: Area Pre building

Runoff = 20.42 cfs @ 12.12 hrs, Volume= 1.385 af, Depth> 2.45"
Routed to Link 1L : (new Link)

Runoff by SCS TR-20 method, UH=SCS, Weighted-CN, Time Span= 5.00-20.00 hrs, dt= 0.05 hrs
Type II 24-hr 50-yr Rainfall=7.15"

Area (sf)	CN	Description
178,480	55	Woods, Good, HSG B
51,330	61	>75% Grass cover, Good, HSG B
65,678	75	1/4 acre lots, 38% imp, HSG B
295,488	60	Weighted Average
270,530		91.55% Pervious Area
24,958		8.45% Impervious Area

Tc (min)	Length (feet)	Slope (ft/ft)	Velocity (ft/sec)	Capacity (cfs)	Description
19.0	957	0.0785	0.84		**Lag/CN Method,**

Summary for Subcatchment E2: 280

[49] Hint: Tc<2dt may require smaller dt

Runoff = 2.57 cfs @ 11.96 hrs, Volume= 0.115 af, Depth> 3.97"
Routed to Link 1L : (new Link)

Runoff by SCS TR-20 method, UH=SCS, Weighted-CN, Time Span= 5.00-20.00 hrs, dt= 0.05 hrs
Type II 24-hr 50-yr Rainfall=7.15"

Area (sf)	CN	Description
15,070	75	1/4 acre lots, 38% imp, HSG B
9,343		62.00% Pervious Area
5,727		38.00% Impervious Area

Tc (min)	Length (feet)	Slope (ft/ft)	Velocity (ft/sec)	Capacity (cfs)	Description
5.5	299	0.0642	0.90		**Lag/CN Method,**

Summary for Subcatchment E3: 280

Runoff = 6.82 cfs @ 12.64 hrs, Volume= 0.986 af, Depth> 2.22"
Routed to Link 1L : (new Link)

Runoff by SCS TR-20 method, UH=SCS, Weighted-CN, Time Span= 5.00-20.00 hrs, dt= 0.05 hrs
Type II 24-hr 50-yr Rainfall=7.15"

Area (sf)	CN	Description
214,851	55	Woods, Good, HSG B
6,000	77	Woods, Good, HSG D
9,006	98	Water Surface, 0% imp, HSG B
2,305	98	Water Surface, 0% imp, HSG D
232,162	58	Weighted Average
232,162		100.00% Pervious Area

Tc (min)	Length (feet)	Slope (ft/ft)	Velocity (ft/sec)	Capacity (cfs)	Description
58.3	997	0.0098	0.28		**Lag/CN Method,**

Summary for Subcatchment E4: 199

[49] Hint: Tc<2dt may require smaller dt

Runoff = 0.03 cfs @ 11.97 hrs, Volume= 0.001 af, Depth> 2.00"
Routed to Link 1L : (new Link)

Runoff by SCS TR-20 method, UH=SCS, Weighted-CN, Time Span= 5.00-20.00 hrs, dt= 0.05 hrs
Type II 24-hr 50-yr Rainfall=7.15"

Area (sf)	CN	Description
371	55	Woods, Good, HSG B
371		100.00% Pervious Area

Tc (min)	Length (feet)	Slope (ft/ft)	Velocity (ft/sec)	Capacity (cfs)	Description
5.0					**Direct Entry,**

Summary for Subcatchment E5: 199

Runoff = 82.84 cfs @ 12.18 hrs, Volume= 6.377 af, Depth> 3.23"
Routed to Link 1L : (new Link)

Runoff by SCS TR-20 method, UH=SCS, Weighted-CN, Time Span= 5.00-20.00 hrs, dt= 0.05 hrs
Type II 24-hr 50-yr Rainfall=7.15"

Area (sf)	CN	Description
123,694	55	Woods, Good, HSG B
424,841	70	Woods, Good, HSG C
73,698	77	Woods, Good, HSG D
372,497	65	Brush, Good, HSG C
59	98	Water Surface, 0% imp, HSG B
37,882	98	Water Surface, 0% imp, HSG D
1,032,671	68	Weighted Average
1,032,671		100.00% Pervious Area

Tc (min)	Length (feet)	Slope (ft/ft)	Velocity (ft/sec)	Capacity (cfs)	Description
24.0	940	0.0314	0.65		**Lag/CN Method,**

Summary for Link 1L: (new Link)

Inflow Area = 36.175 ac, 1.95% Impervious, Inflow Depth > 2.94" for 50-yr event
Inflow = 105.15 cfs @ 12.17 hrs, Volume= 8.863 af
Primary = 105.15 cfs @ 12.17 hrs, Volume= 8.863 af, Atten= 0%, Lag= 0.0 min
Secondary = 0.00 cfs @ 5.00 hrs, Volume= 0.000 af

Primary outflow = Inflow below 1,000.00 cfs, Time Span= 5.00-20.00 hrs, dt= 0.05 hrs

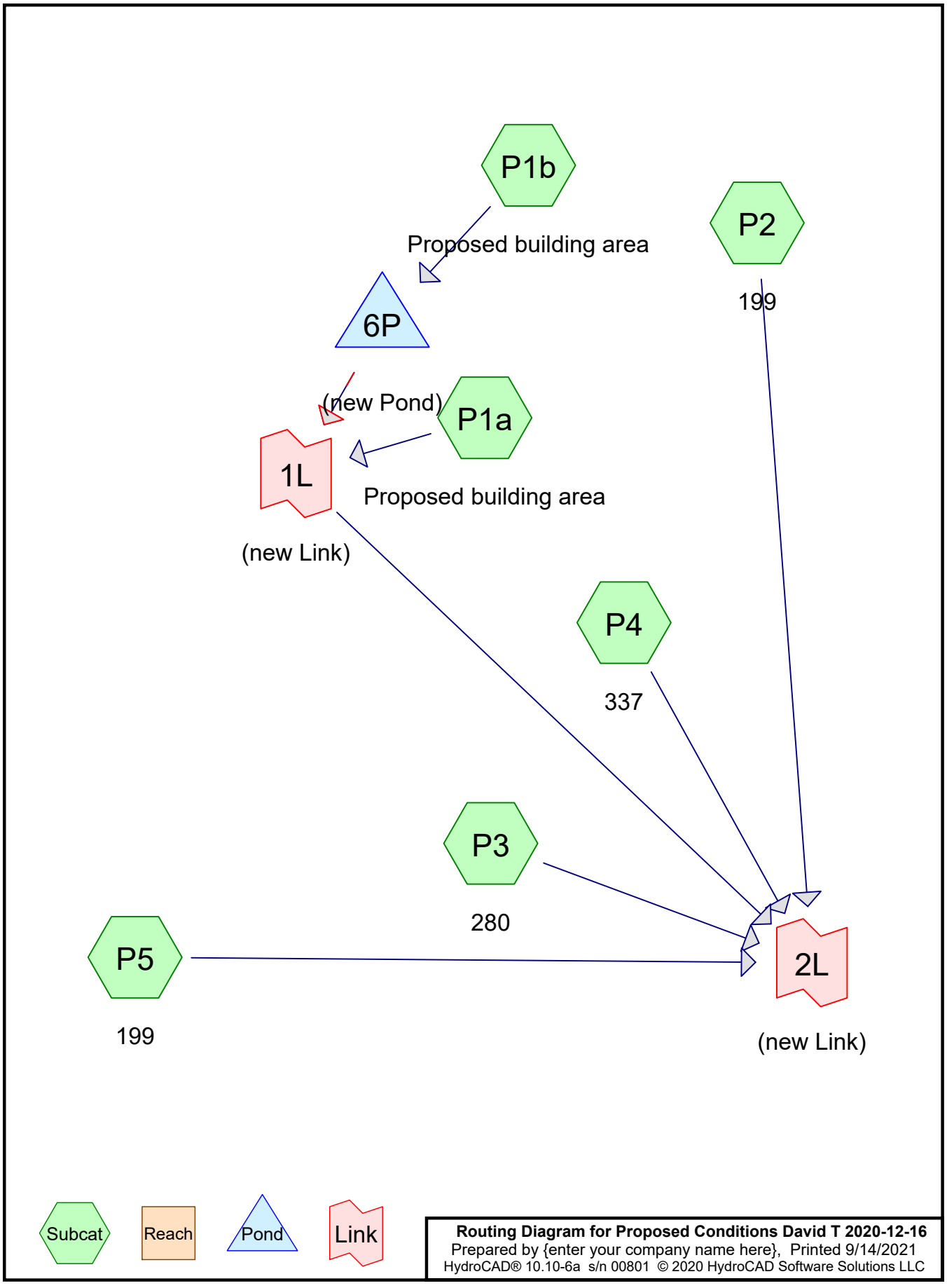

Routing Diagram for Proposed Conditions David T 2020-12-16
Prepared by {enter your company name here}, Printed 9/14/2021
HydroCAD® 10.10-6a s/n 00801 © 2020 HydroCAD Software Solutions LLC

Project Notes

Defined 9 rainfall events from Extreme Precipitation IDF

Rainfall Events Listing (selected events)

Event#	Event Name	Storm Type	Curve	Mode	Duration (hours)	B/B	Depth (inches)	AMC
1	2-yr	Type II 24-hr		Default	24.00	1	3.12	2
2	10-yr	Type II 24-hr		Default	24.00	1	4.72	2
3	25-yr	Type II 24-hr		Default	24.00	1	5.98	2
4	50-yr	Type II 24-hr		Default	24.00	1	7.15	2

Area Listing (all nodes)

Area (acres)	CN	Description (subcatchment-numbers)
1.881	61	>75% Grass cover, Good, HSG B (P1a, P1b, P2)
8.551	65	Brush, Good, HSG C (P5)
0.094	96	Gravel surface, HSG B (P1a, P1b)
0.939	98	Paved parking, HSG B (P1a, P1b, P2)
0.299	98	Roofs, HSG B (P1b)
0.208	98	Water Surface, 0% imp, HSG B (P3, P5)
0.923	98	Water Surface, 0% imp, HSG D (P3, P5)
11.698	55	Woods, Good, HSG B (P1a, P1b, P2, P3, P4, P5)
9.753	70	Woods, Good, HSG C (P5)
1.830	77	Woods, Good, HSG D (P3, P5)
36.176	**66**	**TOTAL AREA**

Soil Listing (all nodes)

Area (acres)	Soil Group	Subcatchment Numbers
0.000	HSG A	
15.119	HSG B	P1a, P1b, P2, P3, P4, P5
18.304	HSG C	P5
2.752	HSG D	P3, P5
0.000	Other	
36.176		**TOTAL AREA**

Ground Covers (all nodes)

HSG-A (acres)	HSG-B (acres)	HSG-C (acres)	HSG-D (acres)	Other (acres)	Total (acres)	Ground Cover	Subcatchment Numbers
0.000	1.881	0.000	0.000	0.000	1.881	>75% Grass cover, Good	P1a, P1b, P2
0.000	0.000	8.551	0.000	0.000	8.551	Brush, Good	P5
0.000	0.094	0.000	0.000	0.000	0.094	Gravel surface	P1a, P1b
0.000	0.939	0.000	0.000	0.000	0.939	Paved parking	P1a, P1b, P2
0.000	0.299	0.000	0.000	0.000	0.299	Roofs	P1b
0.000	0.208	0.000	0.923	0.000	1.131	Water Surface, 0% imp	P3, P5
0.000	11.698	9.753	1.830	0.000	23.281	Woods, Good	P1a, P1b, P2, P3, P4, P5
0.000	**15.119**	**18.304**	**2.752**	**0.000**	**36.176**	**TOTAL AREA**	

Pipe Listing (all nodes)

Line#	Node Number	In-Invert (feet)	Out-Invert (feet)	Length (feet)	Slope (ft/ft)	n	Width (inches)	Diam/Height (inches)	Inside-Fill (inches)
1	6P	166.00	164.00	100.0	0.0200	0.013	0.0	18.0	0.0

Time span=5.00-20.00 hrs, dt=0.05 hrs, 301 points
Runoff by SCS TR-20 method, UH=SCS, Weighted-CN
Reach routing by Stor-Ind+Trans method - Pond routing by Stor-Ind method

Subcatchment P1a: Proposed building area Runoff Area=214,195 sf 3.06% Impervious Runoff Depth>0.26"
Tc=19.0 min CN=58 Runoff=0.88 cfs 0.107 af

Subcatchment P1b: Proposed building area Runoff Area=83,653 sf 54.21% Impervious Runoff Depth>1.29"
Flow Length=400' Slope=0.0458 '/' Tc=6.9 min CN=81 Runoff=4.59 cfs 0.206 af

Subcatchment P2: 199 Runoff Area=13,441 sf 14.97% Impervious Runoff Depth>0.53"
Tc=5.5 min CN=66 Runoff=0.30 cfs 0.014 af

Subcatchment P3: 280 Runoff Area=231,924 sf 0.00% Impervious Runoff Depth>0.25"
Tc=58.3 min CN=58 Runoff=0.48 cfs 0.112 af

Subcatchment P4: 337 Runoff Area=382 sf 0.00% Impervious Runoff Depth>0.19"
Tc=5.0 min CN=55 Runoff=0.00 cfs 0.000 af

Subcatchment P5: 199 Runoff Area=1,032,212 sf 0.00% Impervious Runoff Depth>0.60"
Tc=24.0 min CN=68 Runoff=13.60 cfs 1.192 af

Pond 6P: (new Pond) Peak Elev=166.96' Storage=4,238 cf Inflow=4.59 cfs 0.206 af
Primary=0.60 cfs 0.181 af Secondary=0.00 cfs 0.000 af Outflow=0.60 cfs 0.181 af

Link 1L: (new Link) below 1,000.00 cfs Inflow=1.48 cfs 0.288 af
Primary=1.48 cfs 0.288 af Secondary=0.00 cfs 0.000 af

Link 2L: (new Link) below 1,000.00 cfs Inflow=15.21 cfs 1.606 af
Primary=15.21 cfs 1.606 af Secondary=0.00 cfs 0.000 af

Total Runoff Area = 36.176 ac Runoff Volume = 1.631 af Average Runoff Depth = 0.54"
96.58% Pervious = 34.938 ac 3.42% Impervious = 1.238 ac

Summary for Subcatchment P1a: Proposed building area

Runoff = 0.88 cfs @ 12.19 hrs, Volume= 0.107 af, Depth> 0.26"
Routed to Link 1L : (new Link)

Runoff by SCS TR-20 method, UH=SCS, Weighted-CN, Time Span= 5.00-20.00 hrs, dt= 0.05 hrs
Type II 24-hr 2-yr Rainfall=3.12"

Area (sf)	CN	Description
60	98	Paved parking, HSG B
36,645	61	>75% Grass cover, Good, HSG B
2,775	96	Gravel surface, HSG B
6,487	98	Paved parking, HSG B
168,228	55	Woods, Good, HSG B
214,195	58	Weighted Average
207,648		96.94% Pervious Area
6,547		3.06% Impervious Area

Tc (min)	Length (feet)	Slope (ft/ft)	Velocity (ft/sec)	Capacity (cfs)	Description
19.0					**Direct Entry,**

Summary for Subcatchment P1b: Proposed building area

Runoff = 4.59 cfs @ 11.99 hrs, Volume= 0.206 af, Depth> 1.29"
Routed to Pond 6P : (new Pond)

Runoff by SCS TR-20 method, UH=SCS, Weighted-CN, Time Span= 5.00-20.00 hrs, dt= 0.05 hrs
Type II 24-hr 2-yr Rainfall=3.12"

Area (sf)	CN	Description
3,063	98	Paved parking, HSG B
35,244	61	>75% Grass cover, Good, HSG B
1,321	96	Gravel surface, HSG B
29,261	98	Paved parking, HSG B
13,024	98	Roofs, HSG B
1,740	55	Woods, Good, HSG B
83,653	81	Weighted Average
38,305		45.79% Pervious Area
45,348		54.21% Impervious Area

Tc (min)	Length (feet)	Slope (ft/ft)	Velocity (ft/sec)	Capacity (cfs)	Description
6.9	400	0.0458	0.96		**Lag/CN Method,**

Summary for Subcatchment P2: 199

[49] Hint: Tc<2dt may require smaller dt

Runoff = 0.30 cfs @ 11.98 hrs, Volume= 0.014 af, Depth> 0.53"
Routed to Link 2L : (new Link)

Runoff by SCS TR-20 method, UH=SCS, Weighted-CN, Time Span= 5.00-20.00 hrs, dt= 0.05 hrs
Type II 24-hr 2-yr Rainfall=3.12"

Area (sf)	CN	Description
169	98	Paved parking, HSG B
10,043	61	>75% Grass cover, Good, HSG B
1,843	98	Paved parking, HSG B
1,386	55	Woods, Good, HSG B
13,441	66	Weighted Average
11,429		85.03% Pervious Area
2,012		14.97% Impervious Area

Tc (min)	Length (feet)	Slope (ft/ft)	Velocity (ft/sec)	Capacity (cfs)	Description
5.5					**Direct Entry,**

Summary for Subcatchment P3: 280

Runoff = 0.48 cfs @ 12.83 hrs, Volume= 0.112 af, Depth> 0.25"
Routed to Link 2L : (new Link)

Runoff by SCS TR-20 method, UH=SCS, Weighted-CN, Time Span= 5.00-20.00 hrs, dt= 0.05 hrs
Type II 24-hr 2-yr Rainfall=3.12"

Area (sf)	CN	Description
214,295	55	Woods, Good, HSG B
6,037	77	Woods, Good, HSG D
9,050	98	Water Surface, 0% imp, HSG B
2,542	98	Water Surface, 0% imp, HSG D
231,924	58	Weighted Average
231,924		100.00% Pervious Area

Tc (min)	Length (feet)	Slope (ft/ft)	Velocity (ft/sec)	Capacity (cfs)	Description
58.3					**Direct Entry,**

Summary for Subcatchment P4: 337

[49] Hint: Tc<2dt may require smaller dt

Runoff = 0.00 cfs @ 12.01 hrs, Volume= 0.000 af, Depth> 0.19"
Routed to Link 2L : (new Link)

Runoff by SCS TR-20 method, UH=SCS, Weighted-CN, Time Span= 5.00-20.00 hrs, dt= 0.05 hrs
Type II 24-hr 2-yr Rainfall=3.12"

Area (sf)	CN	Description
382	55	Woods, Good, HSG B
382		100.00% Pervious Area

Tc (min)	Length (feet)	Slope (ft/ft)	Velocity (ft/sec)	Capacity (cfs)	Description
5.0					**Direct Entry,**

Summary for Subcatchment P5: 199

Runoff = 13.60 cfs @ 12.21 hrs, Volume= 1.192 af, Depth> 0.60"
Routed to Link 2L : (new Link)

Runoff by SCS TR-20 method, UH=SCS, Weighted-CN, Time Span= 5.00-20.00 hrs, dt= 0.05 hrs
Type II 24-hr 2-yr Rainfall=3.12"

Area (sf)	CN	Description
123,554	55	Woods, Good, HSG B
424,840	70	Woods, Good, HSG C
73,661	77	Woods, Good, HSG D
15	98	Water Surface, 0% imp, HSG B
37,645	98	Water Surface, 0% imp, HSG D
372,497	65	Brush, Good, HSG C
1,032,212	68	Weighted Average
1,032,212		100.00% Pervious Area

Tc (min)	Length (feet)	Slope (ft/ft)	Velocity (ft/sec)	Capacity (cfs)	Description
24.0					**Direct Entry,**

Summary for Pond 6P: (new Pond)

Inflow Area = 1.920 ac, 54.21% Impervious, Inflow Depth > 1.29" for 2-yr event
Inflow = 4.59 cfs @ 11.99 hrs, Volume= 0.206 af
Outflow = 0.60 cfs @ 12.34 hrs, Volume= 0.181 af, Atten= 87%, Lag= 21.0 min
Primary = 0.60 cfs @ 12.34 hrs, Volume= 0.181 af
Routed to Link 1L : (new Link)
Secondary = 0.00 cfs @ 5.00 hrs, Volume= 0.000 af
Routed to Link 1L : (new Link)

Routing by Stor-Ind method, Time Span= 5.00-20.00 hrs, dt= 0.05 hrs
Peak Elev= 166.96' @ 12.34 hrs Surf.Area= 4,780 sf Storage= 4,238 cf

Plug-Flow detention time= 129.1 min calculated for 0.181 af (88% of inflow)
Center-of-Mass det. time= 89.2 min (883.3 - 794.1)

Volume	Invert	Avail.Storage	Storage Description
#1	166.00'	22,759 cf	**Custom Stage Data (Pyramidal)** Listed below (Recalc)

Elevation (feet)	Surf.Area (sq-ft)	Inc.Store (cubic-feet)	Cum.Store (cubic-feet)	Wet.Area (sq-ft)
166.00	4,049	0	0	4,049
168.00	5,639	9,644	9,644	5,733
170.00	7,521	13,115	22,759	7,723

Device	Routing	Invert	Outlet Devices
#1	Primary	166.00'	**18.0" Round Culvert** L= 100.0' CPP, square edge headwall, Ke= 0.500 Inlet / Outlet Invert= 166.00' / 164.00' S= 0.0200 '/' Cc= 0.900 n= 0.013 Corrugated PE, smooth interior, Flow Area= 1.77 sf
#2	Secondary	168.75'	**9.0' long Sharp-Crested Rectangular Weir** 2 End Contraction(s)
#3	Device 1	166.00'	**Custom Weir/Orifice, Cv= 2.62 (C= 3.28)** Head (feet) 0.00 2.75 Width (feet) 0.00 0.90
#4	Device 1	166.00'	**3.0" Vert. Orifice/Grate** C= 0.600 Limited to weir flow at low heads

Primary OutFlow Max=0.60 cfs @ 12.34 hrs HW=166.96' (Free Discharge)
└**1=Culvert** (Passes 0.60 cfs of 3.99 cfs potential flow)
  └**3=Custom Weir/Orifice** (Weir Controls 0.39 cfs @ 2.57 fps)
  └**4=Orifice/Grate** (Orifice Controls 0.22 cfs @ 4.40 fps)

Secondary OutFlow Max=0.00 cfs @ 5.00 hrs HW=166.00' (Free Discharge)
└**2=Sharp-Crested Rectangular Weir** (Controls 0.00 cfs)

Summary for Link 1L: (new Link)

Inflow Area = 6.838 ac, 17.42% Impervious, Inflow Depth > 0.50" for 2-yr event
Inflow = 1.48 cfs @ 12.20 hrs, Volume= 0.288 af
Primary = 1.48 cfs @ 12.20 hrs, Volume= 0.288 af, Atten= 0%, Lag= 0.0 min
Routed to Link 2L : (new Link)
Secondary = 0.00 cfs @ 5.00 hrs, Volume= 0.000 af

Primary outflow = Inflow below 1,000.00 cfs, Time Span= 5.00-20.00 hrs, dt= 0.05 hrs

Summary for Link 2L: (new Link)

Inflow Area = 36.176 ac, 3.42% Impervious, Inflow Depth > 0.53" for 2-yr event
Inflow = 15.21 cfs @ 12.21 hrs, Volume= 1.606 af
Primary = 15.21 cfs @ 12.21 hrs, Volume= 1.606 af, Atten= 0%, Lag= 0.0 min
Secondary = 0.00 cfs @ 5.00 hrs, Volume= 0.000 af

Primary outflow = Inflow below 1,000.00 cfs, Time Span= 5.00-20.00 hrs, dt= 0.05 hrs

Time span=5.00-20.00 hrs, dt=0.05 hrs, 301 points
Runoff by SCS TR-20 method, UH=SCS, Weighted-CN
Reach routing by Stor-Ind+Trans method - Pond routing by Stor-Ind method

Subcatchment P1a: Proposed building area Runoff Area=214,195 sf 3.06% Impervious Runoff Depth>0.89"
Tc=19.0 min CN=58 Runoff=4.82 cfs 0.366 af

Subcatchment P1b: Proposed building area Runoff Area=83,653 sf 54.21% Impervious Runoff Depth>2.54"
Flow Length=400' Slope=0.0458 '/' Tc=6.9 min CN=81 Runoff=8.82 cfs 0.406 af

Subcatchment P2: 199 Runoff Area=13,441 sf 14.97% Impervious Runoff Depth>1.39"
Tc=5.5 min CN=66 Runoff=0.83 cfs 0.036 af

Subcatchment P3: 280 Runoff Area=231,924 sf 0.00% Impervious Runoff Depth>0.87"
Tc=58.3 min CN=58 Runoff=2.35 cfs 0.387 af

Subcatchment P4: 337 Runoff Area=382 sf 0.00% Impervious Runoff Depth>0.74"
Tc=5.0 min CN=55 Runoff=0.01 cfs 0.001 af

Subcatchment P5: 199 Runoff Area=1,032,212 sf 0.00% Impervious Runoff Depth>1.51"
Tc=24.0 min CN=68 Runoff=37.98 cfs 2.988 af

Pond 6P: (new Pond) Peak Elev=167.72' Storage=8,126 cf Inflow=8.82 cfs 0.406 af
Primary=1.97 cfs 0.369 af Secondary=0.00 cfs 0.000 af Outflow=1.97 cfs 0.369 af

Link 1L: (new Link) below 1,000.00 cfs Inflow=6.78 cfs 0.735 af
Primary=6.78 cfs 0.735 af Secondary=0.00 cfs 0.000 af

Link 2L: (new Link) below 1,000.00 cfs Inflow=45.28 cfs 4.146 af
Primary=45.28 cfs 4.146 af Secondary=0.00 cfs 0.000 af

Total Runoff Area = 36.176 ac Runoff Volume = 4.183 af Average Runoff Depth = 1.39"
96.58% Pervious = 34.938 ac 3.42% Impervious = 1.238 ac

Summary for Subcatchment P1a: Proposed building area

Runoff = 4.82 cfs @ 12.15 hrs, Volume= 0.366 af, Depth> 0.89"
Routed to Link 1L : (new Link)

Runoff by SCS TR-20 method, UH=SCS, Weighted-CN, Time Span= 5.00-20.00 hrs, dt= 0.05 hrs
Type II 24-hr 10-yr Rainfall=4.72"

Area (sf)	CN	Description
60	98	Paved parking, HSG B
36,645	61	>75% Grass cover, Good, HSG B
2,775	96	Gravel surface, HSG B
6,487	98	Paved parking, HSG B
168,228	55	Woods, Good, HSG B
214,195	58	Weighted Average
207,648		96.94% Pervious Area
6,547		3.06% Impervious Area

Tc (min)	Length (feet)	Slope (ft/ft)	Velocity (ft/sec)	Capacity (cfs)	Description
19.0					**Direct Entry,**

Summary for Subcatchment P1b: Proposed building area

Runoff = 8.82 cfs @ 11.98 hrs, Volume= 0.406 af, Depth> 2.54"
Routed to Pond 6P : (new Pond)

Runoff by SCS TR-20 method, UH=SCS, Weighted-CN, Time Span= 5.00-20.00 hrs, dt= 0.05 hrs
Type II 24-hr 10-yr Rainfall=4.72"

Area (sf)	CN	Description
3,063	98	Paved parking, HSG B
35,244	61	>75% Grass cover, Good, HSG B
1,321	96	Gravel surface, HSG B
29,261	98	Paved parking, HSG B
13,024	98	Roofs, HSG B
1,740	55	Woods, Good, HSG B
83,653	81	Weighted Average
38,305		45.79% Pervious Area
45,348		54.21% Impervious Area

Tc (min)	Length (feet)	Slope (ft/ft)	Velocity (ft/sec)	Capacity (cfs)	Description
6.9	400	0.0458	0.96		**Lag/CN Method,**

Summary for Subcatchment P2: 199

[49] Hint: Tc<2dt may require smaller dt

Runoff = 0.83 cfs @ 11.97 hrs, Volume= 0.036 af, Depth> 1.39"
Routed to Link 2L : (new Link)

Runoff by SCS TR-20 method, UH=SCS, Weighted-CN, Time Span= 5.00-20.00 hrs, dt= 0.05 hrs
Type II 24-hr 10-yr Rainfall=4.72"

Area (sf)	CN	Description
169	98	Paved parking, HSG B
10,043	61	>75% Grass cover, Good, HSG B
1,843	98	Paved parking, HSG B
1,386	55	Woods, Good, HSG B
13,441	66	Weighted Average
11,429		85.03% Pervious Area
2,012		14.97% Impervious Area

Tc (min)	Length (feet)	Slope (ft/ft)	Velocity (ft/sec)	Capacity (cfs)	Description
5.5					**Direct Entry,**

Summary for Subcatchment P3: 280

Runoff = 2.35 cfs @ 12.69 hrs, Volume= 0.387 af, Depth> 0.87"
Routed to Link 2L : (new Link)

Runoff by SCS TR-20 method, UH=SCS, Weighted-CN, Time Span= 5.00-20.00 hrs, dt= 0.05 hrs
Type II 24-hr 10-yr Rainfall=4.72"

Area (sf)	CN	Description
214,295	55	Woods, Good, HSG B
6,037	77	Woods, Good, HSG D
9,050	98	Water Surface, 0% imp, HSG B
2,542	98	Water Surface, 0% imp, HSG D
231,924	58	Weighted Average
231,924		100.00% Pervious Area

Tc (min)	Length (feet)	Slope (ft/ft)	Velocity (ft/sec)	Capacity (cfs)	Description
58.3					**Direct Entry,**

Summary for Subcatchment P4: 337

[49] Hint: Tc<2dt may require smaller dt

Runoff = 0.01 cfs @ 11.98 hrs, Volume= 0.001 af, Depth> 0.74"
Routed to Link 2L : (new Link)

Runoff by SCS TR-20 method, UH=SCS, Weighted-CN, Time Span= 5.00-20.00 hrs, dt= 0.05 hrs
Type II 24-hr 10-yr Rainfall=4.72"

Area (sf)	CN	Description
382	55	Woods, Good, HSG B
382		100.00% Pervious Area

Tc (min)	Length (feet)	Slope (ft/ft)	Velocity (ft/sec)	Capacity (cfs)	Description
5.0					**Direct Entry,**

Summary for Subcatchment P5: 199

Runoff = 37.98 cfs @ 12.19 hrs, Volume= 2.988 af, Depth> 1.51"
Routed to Link 2L : (new Link)

Runoff by SCS TR-20 method, UH=SCS, Weighted-CN, Time Span= 5.00-20.00 hrs, dt= 0.05 hrs
Type II 24-hr 10-yr Rainfall=4.72"

Area (sf)	CN	Description
123,554	55	Woods, Good, HSG B
424,840	70	Woods, Good, HSG C
73,661	77	Woods, Good, HSG D
15	98	Water Surface, 0% imp, HSG B
37,645	98	Water Surface, 0% imp, HSG D
372,497	65	Brush, Good, HSG C
1,032,212	68	Weighted Average
1,032,212		100.00% Pervious Area

Tc (min)	Length (feet)	Slope (ft/ft)	Velocity (ft/sec)	Capacity (cfs)	Description
24.0					**Direct Entry,**

Summary for Pond 6P: (new Pond)

Inflow Area = 1.920 ac, 54.21% Impervious, Inflow Depth > 2.54" for 10-yr event
Inflow = 8.82 cfs @ 11.98 hrs, Volume= 0.406 af
Outflow = 1.97 cfs @ 12.17 hrs, Volume= 0.369 af, Atten= 78%, Lag= 11.0 min
Primary = 1.97 cfs @ 12.17 hrs, Volume= 0.369 af
Routed to Link 1L : (new Link)
Secondary = 0.00 cfs @ 5.00 hrs, Volume= 0.000 af
Routed to Link 1L : (new Link)

Routing by Stor-Ind method, Time Span= 5.00-20.00 hrs, dt= 0.05 hrs
Peak Elev= 167.72' @ 12.17 hrs Surf.Area= 5,405 sf Storage= 8,126 cf

Plug-Flow detention time= 102.1 min calculated for 0.367 af (90% of inflow)
Center-of-Mass det. time= 70.6 min (850.1 - 779.5)

Volume	Invert	Avail.Storage	Storage Description
#1	166.00'	22,759 cf	**Custom Stage Data (Pyramidal)** Listed below (Recalc)

Elevation (feet)	Surf.Area (sq-ft)	Inc.Store (cubic-feet)	Cum.Store (cubic-feet)	Wet.Area (sq-ft)
166.00	4,049	0	0	4,049
168.00	5,639	9,644	9,644	5,733
170.00	7,521	13,115	22,759	7,723

Device	Routing	Invert	Outlet Devices
#1	Primary	166.00'	**18.0" Round Culvert** L= 100.0' CPP, square edge headwall, Ke= 0.500 Inlet / Outlet Invert= 166.00' / 164.00' S= 0.0200 '/' Cc= 0.900 n= 0.013 Corrugated PE, smooth interior, Flow Area= 1.77 sf
#2	Secondary	168.75'	**9.0' long Sharp-Crested Rectangular Weir** 2 End Contraction(s)
#3	Device 1	166.00'	**Custom Weir/Orifice, Cv= 2.62 (C= 3.28)** Head (feet) 0.00 2.75 Width (feet) 0.00 0.90
#4	Device 1	166.00'	**3.0" Vert. Orifice/Grate** C= 0.600 Limited to weir flow at low heads

Primary OutFlow Max=1.97 cfs @ 12.17 hrs HW=167.72' (Free Discharge)
└**1=Culvert** (Passes 1.97 cfs of 8.39 cfs potential flow)
  └**3=Custom Weir/Orifice** (Weir Controls 1.67 cfs @ 3.44 fps)
  └**4=Orifice/Grate** (Orifice Controls 0.30 cfs @ 6.08 fps)

Secondary OutFlow Max=0.00 cfs @ 5.00 hrs HW=166.00' (Free Discharge)
└**2=Sharp-Crested Rectangular Weir** (Controls 0.00 cfs)

Summary for Link 1L: (new Link)

Inflow Area = 6.838 ac, 17.42% Impervious, Inflow Depth > 1.29" for 10-yr event
Inflow = 6.78 cfs @ 12.15 hrs, Volume= 0.735 af
Primary = 6.78 cfs @ 12.15 hrs, Volume= 0.735 af, Atten= 0%, Lag= 0.0 min
Routed to Link 2L : (new Link)
Secondary = 0.00 cfs @ 5.00 hrs, Volume= 0.000 af

Primary outflow = Inflow below 1,000.00 cfs, Time Span= 5.00-20.00 hrs, dt= 0.05 hrs

Summary for Link 2L: (new Link)

Inflow Area = 36.176 ac, 3.42% Impervious, Inflow Depth > 1.38" for 10-yr event
Inflow = 45.28 cfs @ 12.18 hrs, Volume= 4.146 af
Primary = 45.28 cfs @ 12.18 hrs, Volume= 4.146 af, Atten= 0%, Lag= 0.0 min
Secondary = 0.00 cfs @ 5.00 hrs, Volume= 0.000 af

Primary outflow = Inflow below 1,000.00 cfs, Time Span= 5.00-20.00 hrs, dt= 0.05 hrs

Time span=5.00-20.00 hrs, dt=0.05 hrs, 301 points
Runoff by SCS TR-20 method, UH=SCS, Weighted-CN
Reach routing by Stor-Ind+Trans method - Pond routing by Stor-Ind method

Subcatchment P1a: Proposed building area Runoff Area=214,195 sf 3.06% Impervious Runoff Depth>1.56"
Tc=19.0 min CN=58 Runoff=9.06 cfs 0.637 af

Subcatchment P1b: Proposed building area Runoff Area=83,653 sf 54.21% Impervious Runoff Depth>3.60"
Flow Length=400' Slope=0.0458 '/' Tc=6.9 min CN=81 Runoff=12.28 cfs 0.576 af

Subcatchment P2: 199 Runoff Area=13,441 sf 14.97% Impervious Runoff Depth>2.21"
Tc=5.5 min CN=66 Runoff=1.32 cfs 0.057 af

Subcatchment P3: 280 Runoff Area=231,924 sf 0.00% Impervious Runoff Depth>1.52"
Tc=58.3 min CN=58 Runoff=4.50 cfs 0.676 af

Subcatchment P4: 337 Runoff Area=382 sf 0.00% Impervious Runoff Depth>1.34"
Tc=5.0 min CN=55 Runoff=0.02 cfs 0.001 af

Subcatchment P5: 199 Runoff Area=1,032,212 sf 0.00% Impervious Runoff Depth>2.37"
Tc=24.0 min CN=68 Runoff=60.45 cfs 4.673 af

Pond 6P: (new Pond) Peak Elev=168.25' Storage=11,057 cf Inflow=12.28 cfs 0.576 af
Primary=3.58 cfs 0.531 af Secondary=0.00 cfs 0.000 af Outflow=3.58 cfs 0.531 af

Link 1L: (new Link) below 1,000.00 cfs Inflow=12.64 cfs 1.168 af
Primary=12.64 cfs 1.168 af Secondary=0.00 cfs 0.000 af

Link 2L: (new Link) below 1,000.00 cfs Inflow=74.37 cfs 6.575 af
Primary=74.37 cfs 6.575 af Secondary=0.00 cfs 0.000 af

Total Runoff Area = 36.176 ac Runoff Volume = 6.620 af Average Runoff Depth = 2.20"
96.58% Pervious = 34.938 ac 3.42% Impervious = 1.238 ac

Summary for Subcatchment P1a: Proposed building area

Runoff = 9.06 cfs @ 12.13 hrs, Volume= 0.637 af, Depth> 1.56"
Routed to Link 1L : (new Link)

Runoff by SCS TR-20 method, UH=SCS, Weighted-CN, Time Span= 5.00-20.00 hrs, dt= 0.05 hrs
Type II 24-hr 25-yr Rainfall=5.98"

Area (sf)	CN	Description
60	98	Paved parking, HSG B
36,645	61	>75% Grass cover, Good, HSG B
2,775	96	Gravel surface, HSG B
6,487	98	Paved parking, HSG B
168,228	55	Woods, Good, HSG B
214,195	58	Weighted Average
207,648		96.94% Pervious Area
6,547		3.06% Impervious Area

Tc (min)	Length (feet)	Slope (ft/ft)	Velocity (ft/sec)	Capacity (cfs)	Description
19.0					**Direct Entry,**

Summary for Subcatchment P1b: Proposed building area

Runoff = 12.28 cfs @ 11.98 hrs, Volume= 0.576 af, Depth> 3.60"
Routed to Pond 6P : (new Pond)

Runoff by SCS TR-20 method, UH=SCS, Weighted-CN, Time Span= 5.00-20.00 hrs, dt= 0.05 hrs
Type II 24-hr 25-yr Rainfall=5.98"

Area (sf)	CN	Description
3,063	98	Paved parking, HSG B
35,244	61	>75% Grass cover, Good, HSG B
1,321	96	Gravel surface, HSG B
29,261	98	Paved parking, HSG B
13,024	98	Roofs, HSG B
1,740	55	Woods, Good, HSG B
83,653	81	Weighted Average
38,305		45.79% Pervious Area
45,348		54.21% Impervious Area

Tc (min)	Length (feet)	Slope (ft/ft)	Velocity (ft/sec)	Capacity (cfs)	Description
6.9	400	0.0458	0.96		**Lag/CN Method,**

Summary for Subcatchment P2: 199

[49] Hint: Tc<2dt may require smaller dt

Runoff = 1.32 cfs @ 11.97 hrs, Volume= 0.057 af, Depth> 2.21"
Routed to Link 2L : (new Link)

Runoff by SCS TR-20 method, UH=SCS, Weighted-CN, Time Span= 5.00-20.00 hrs, dt= 0.05 hrs
Type II 24-hr 25-yr Rainfall=5.98"

Area (sf)	CN	Description
169	98	Paved parking, HSG B
10,043	61	>75% Grass cover, Good, HSG B
1,843	98	Paved parking, HSG B
1,386	55	Woods, Good, HSG B
13,441	66	Weighted Average
11,429		85.03% Pervious Area
2,012		14.97% Impervious Area

Tc (min)	Length (feet)	Slope (ft/ft)	Velocity (ft/sec)	Capacity (cfs)	Description
5.5					**Direct Entry,**

Summary for Subcatchment P3: 280

Runoff = 4.50 cfs @ 12.66 hrs, Volume= 0.676 af, Depth> 1.52"
Routed to Link 2L : (new Link)

Runoff by SCS TR-20 method, UH=SCS, Weighted-CN, Time Span= 5.00-20.00 hrs, dt= 0.05 hrs
Type II 24-hr 25-yr Rainfall=5.98"

Area (sf)	CN	Description
214,295	55	Woods, Good, HSG B
6,037	77	Woods, Good, HSG D
9,050	98	Water Surface, 0% imp, HSG B
2,542	98	Water Surface, 0% imp, HSG D
231,924	58	Weighted Average
231,924		100.00% Pervious Area

Tc (min)	Length (feet)	Slope (ft/ft)	Velocity (ft/sec)	Capacity (cfs)	Description
58.3					**Direct Entry,**

Summary for Subcatchment P4: 337

[49] Hint: Tc<2dt may require smaller dt

Runoff = 0.02 cfs @ 11.97 hrs, Volume= 0.001 af, Depth> 1.34"
Routed to Link 2L : (new Link)

Runoff by SCS TR-20 method, UH=SCS, Weighted-CN, Time Span= 5.00-20.00 hrs, dt= 0.05 hrs
Type II 24-hr 25-yr Rainfall=5.98"

Area (sf)	CN	Description
382	55	Woods, Good, HSG B
382		100.00% Pervious Area

Tc (min)	Length (feet)	Slope (ft/ft)	Velocity (ft/sec)	Capacity (cfs)	Description
5.0					**Direct Entry,**

Summary for Subcatchment P5: 199

Runoff = 60.45 cfs @ 12.18 hrs, Volume= 4.673 af, Depth> 2.37"
Routed to Link 2L : (new Link)

Runoff by SCS TR-20 method, UH=SCS, Weighted-CN, Time Span= 5.00-20.00 hrs, dt= 0.05 hrs
Type II 24-hr 25-yr Rainfall=5.98"

Area (sf)	CN	Description
123,554	55	Woods, Good, HSG B
424,840	70	Woods, Good, HSG C
73,661	77	Woods, Good, HSG D
15	98	Water Surface, 0% imp, HSG B
37,645	98	Water Surface, 0% imp, HSG D
372,497	65	Brush, Good, HSG C
1,032,212	68	Weighted Average
1,032,212		100.00% Pervious Area

Tc (min)	Length (feet)	Slope (ft/ft)	Velocity (ft/sec)	Capacity (cfs)	Description
24.0					**Direct Entry,**

Summary for Pond 6P: (new Pond)

Inflow Area = 1.920 ac, 54.21% Impervious, Inflow Depth > 3.60" for 25-yr event
Inflow = 12.28 cfs @ 11.98 hrs, Volume= 0.576 af
Outflow = 3.58 cfs @ 12.13 hrs, Volume= 0.531 af, Atten= 71%, Lag= 9.1 min
Primary = 3.58 cfs @ 12.13 hrs, Volume= 0.531 af
Routed to Link 1L : (new Link)
Secondary = 0.00 cfs @ 5.00 hrs, Volume= 0.000 af
Routed to Link 1L : (new Link)

Routing by Stor-Ind method, Time Span= 5.00-20.00 hrs, dt= 0.05 hrs
Peak Elev= 168.25' @ 12.13 hrs Surf.Area= 5,856 sf Storage= 11,057 cf

Plug-Flow detention time= 89.1 min calculated for 0.529 af (92% of inflow)
Center-of-Mass det. time= 61.4 min (833.1 - 771.6)

Volume	Invert	Avail.Storage	Storage Description
#1	166.00'	22,759 cf	**Custom Stage Data (Pyramidal)** Listed below (Recalc)

Elevation (feet)	Surf.Area (sq-ft)	Inc.Store (cubic-feet)	Cum.Store (cubic-feet)	Wet.Area (sq-ft)
166.00	4,049	0	0	4,049
168.00	5,639	9,644	9,644	5,733
170.00	7,521	13,115	22,759	7,723

Device	Routing	Invert	Outlet Devices
#1	Primary	166.00'	**18.0" Round Culvert** L= 100.0' CPP, square edge headwall, Ke= 0.500 Inlet / Outlet Invert= 166.00' / 164.00' S= 0.0200 '/' Cc= 0.900 n= 0.013 Corrugated PE, smooth interior, Flow Area= 1.77 sf
#2	Secondary	168.75'	**9.0' long Sharp-Crested Rectangular Weir** 2 End Contraction(s)
#3	Device 1	166.00'	**Custom Weir/Orifice, Cv= 2.62 (C= 3.28)** Head (feet) 0.00 2.75 Width (feet) 0.00 0.90
#4	Device 1	166.00'	**3.0" Vert. Orifice/Grate** C= 0.600 Limited to weir flow at low heads

Primary OutFlow Max=3.57 cfs @ 12.13 hrs HW=168.24' (Free Discharge)
↑└**1=Culvert** (Passes 3.57 cfs of 10.39 cfs potential flow)
↑ └**3=Custom Weir/Orifice** (Weir Controls 3.22 cfs @ 3.92 fps)
└**4=Orifice/Grate** (Orifice Controls 0.34 cfs @ 7.00 fps)

Secondary OutFlow Max=0.00 cfs @ 5.00 hrs HW=166.00' (Free Discharge)
↑└**2=Sharp-Crested Rectangular Weir** (Controls 0.00 cfs)

Summary for Link 1L: (new Link)

Inflow Area = 6.838 ac, 17.42% Impervious, Inflow Depth > 2.05" for 25-yr event
Inflow = 12.64 cfs @ 12.13 hrs, Volume= 1.168 af
Primary = 12.64 cfs @ 12.13 hrs, Volume= 1.168 af, Atten= 0%, Lag= 0.0 min
Routed to Link 2L : (new Link)
Secondary = 0.00 cfs @ 5.00 hrs, Volume= 0.000 af

Primary outflow = Inflow below 1,000.00 cfs, Time Span= 5.00-20.00 hrs, dt= 0.05 hrs

Summary for Link 2L: (new Link)

Inflow Area = 36.176 ac, 3.42% Impervious, Inflow Depth > 2.18" for 25-yr event
Inflow = 74.37 cfs @ 12.17 hrs, Volume= 6.575 af
Primary = 74.37 cfs @ 12.17 hrs, Volume= 6.575 af, Atten= 0%, Lag= 0.0 min
Secondary = 0.00 cfs @ 5.00 hrs, Volume= 0.000 af

Primary outflow = Inflow below 1,000.00 cfs, Time Span= 5.00-20.00 hrs, dt= 0.05 hrs

Time span=5.00-20.00 hrs, dt=0.05 hrs, 301 points
Runoff by SCS TR-20 method, UH=SCS, Weighted-CN
Reach routing by Stor-Ind+Trans method - Pond routing by Stor-Ind method

Subcatchment P1a: Proposed building area Runoff Area=214,195 sf 3.06% Impervious Runoff Depth>2.26"
Tc=19.0 min CN=58 Runoff=13.52 cfs 0.927 af

Subcatchment P1b: Proposed building area Runoff Area=83,653 sf 54.21% Impervious Runoff Depth>4.62"
Flow Length=400' Slope=0.0458 '/' Tc=6.9 min CN=81 Runoff=15.51 cfs 0.739 af

Subcatchment P2: 199 Runoff Area=13,441 sf 14.97% Impervious Runoff Depth>3.05"
Tc=5.5 min CN=66 Runoff=1.81 cfs 0.078 af

Subcatchment P3: 280 Runoff Area=231,924 sf 0.00% Impervious Runoff Depth>2.22"
Tc=58.3 min CN=58 Runoff=6.81 cfs 0.985 af

Subcatchment P4: 337 Runoff Area=382 sf 0.00% Impervious Runoff Depth>2.00"
Tc=5.0 min CN=55 Runoff=0.03 cfs 0.001 af

Subcatchment P5: 199 Runoff Area=1,032,212 sf 0.00% Impervious Runoff Depth>3.23"
Tc=24.0 min CN=68 Runoff=82.80 cfs 6.374 af

Pond 6P: (new Pond) Peak Elev=168.68' Storage=13,668 cf Inflow=15.51 cfs 0.739 af
Primary=5.41 cfs 0.687 af Secondary=0.00 cfs 0.000 af Outflow=5.41 cfs 0.687 af

Link 1L: (new Link) below 1,000.00 cfs Inflow=18.96 cfs 1.614 af
Primary=18.96 cfs 1.614 af Secondary=0.00 cfs 0.000 af

Link 2L: (new Link) below 1,000.00 cfs Inflow=103.72 cfs 9.052 af
Primary=103.72 cfs 9.052 af Secondary=0.00 cfs 0.000 af

Total Runoff Area = 36.176 ac Runoff Volume = 9.104 af Average Runoff Depth = 3.02"
96.58% Pervious = 34.938 ac 3.42% Impervious = 1.238 ac

Summary for Subcatchment P1a: Proposed building area

Runoff = 13.52 cfs @ 12.13 hrs, Volume= 0.927 af, Depth> 2.26"
Routed to Link 1L : (new Link)

Runoff by SCS TR-20 method, UH=SCS, Weighted-CN, Time Span= 5.00-20.00 hrs, dt= 0.05 hrs
Type II 24-hr 50-yr Rainfall=7.15"

Area (sf)	CN	Description
60	98	Paved parking, HSG B
36,645	61	>75% Grass cover, Good, HSG B
2,775	96	Gravel surface, HSG B
6,487	98	Paved parking, HSG B
168,228	55	Woods, Good, HSG B
214,195	58	Weighted Average
207,648		96.94% Pervious Area
6,547		3.06% Impervious Area

Tc (min)	Length (feet)	Slope (ft/ft)	Velocity (ft/sec)	Capacity (cfs)	Description
19.0					**Direct Entry,**

Summary for Subcatchment P1b: Proposed building area

Runoff = 15.51 cfs @ 11.98 hrs, Volume= 0.739 af, Depth> 4.62"
Routed to Pond 6P : (new Pond)

Runoff by SCS TR-20 method, UH=SCS, Weighted-CN, Time Span= 5.00-20.00 hrs, dt= 0.05 hrs
Type II 24-hr 50-yr Rainfall=7.15"

Area (sf)	CN	Description
3,063	98	Paved parking, HSG B
35,244	61	>75% Grass cover, Good, HSG B
1,321	96	Gravel surface, HSG B
29,261	98	Paved parking, HSG B
13,024	98	Roofs, HSG B
1,740	55	Woods, Good, HSG B
83,653	81	Weighted Average
38,305		45.79% Pervious Area
45,348		54.21% Impervious Area

Tc (min)	Length (feet)	Slope (ft/ft)	Velocity (ft/sec)	Capacity (cfs)	Description
6.9	400	0.0458	0.96		**Lag/CN Method,**

Summary for Subcatchment P2: 199

[49] Hint: Tc<2dt may require smaller dt

Runoff = 1.81 cfs @ 11.97 hrs, Volume= 0.078 af, Depth> 3.05"
Routed to Link 2L : (new Link)

Runoff by SCS TR-20 method, UH=SCS, Weighted-CN, Time Span= 5.00-20.00 hrs, dt= 0.05 hrs
Type II 24-hr 50-yr Rainfall=7.15"

Area (sf)	CN	Description
169	98	Paved parking, HSG B
10,043	61	>75% Grass cover, Good, HSG B
1,843	98	Paved parking, HSG B
1,386	55	Woods, Good, HSG B
13,441	66	Weighted Average
11,429		85.03% Pervious Area
2,012		14.97% Impervious Area

Tc (min)	Length (feet)	Slope (ft/ft)	Velocity (ft/sec)	Capacity (cfs)	Description
5.5					**Direct Entry,**

Summary for Subcatchment P3: 280

Runoff = 6.81 cfs @ 12.64 hrs, Volume= 0.985 af, Depth> 2.22"
Routed to Link 2L : (new Link)

Runoff by SCS TR-20 method, UH=SCS, Weighted-CN, Time Span= 5.00-20.00 hrs, dt= 0.05 hrs
Type II 24-hr 50-yr Rainfall=7.15"

Area (sf)	CN	Description
214,295	55	Woods, Good, HSG B
6,037	77	Woods, Good, HSG D
9,050	98	Water Surface, 0% imp, HSG B
2,542	98	Water Surface, 0% imp, HSG D
231,924	58	Weighted Average
231,924		100.00% Pervious Area

Tc (min)	Length (feet)	Slope (ft/ft)	Velocity (ft/sec)	Capacity (cfs)	Description
58.3					**Direct Entry,**

Summary for Subcatchment P4: 337

[49] Hint: Tc<2dt may require smaller dt

Runoff = 0.03 cfs @ 11.97 hrs, Volume= 0.001 af, Depth> 2.00"
Routed to Link 2L : (new Link)

Runoff by SCS TR-20 method, UH=SCS, Weighted-CN, Time Span= 5.00-20.00 hrs, dt= 0.05 hrs
Type II 24-hr 50-yr Rainfall=7.15"

Area (sf)	CN	Description
382	55	Woods, Good, HSG B
382		100.00% Pervious Area

Tc (min)	Length (feet)	Slope (ft/ft)	Velocity (ft/sec)	Capacity (cfs)	Description
5.0					**Direct Entry,**

Summary for Subcatchment P5: 199

Runoff = 82.80 cfs @ 12.18 hrs, Volume= 6.374 af, Depth> 3.23"
Routed to Link 2L : (new Link)

Runoff by SCS TR-20 method, UH=SCS, Weighted-CN, Time Span= 5.00-20.00 hrs, dt= 0.05 hrs
Type II 24-hr 50-yr Rainfall=7.15"

Area (sf)	CN	Description
123,554	55	Woods, Good, HSG B
424,840	70	Woods, Good, HSG C
73,661	77	Woods, Good, HSG D
15	98	Water Surface, 0% imp, HSG B
37,645	98	Water Surface, 0% imp, HSG D
372,497	65	Brush, Good, HSG C
1,032,212	68	Weighted Average
1,032,212		100.00% Pervious Area

Tc (min)	Length (feet)	Slope (ft/ft)	Velocity (ft/sec)	Capacity (cfs)	Description
24.0					**Direct Entry,**

Summary for Pond 6P: (new Pond)

Inflow Area = 1.920 ac, 54.21% Impervious, Inflow Depth > 4.62" for 50-yr event
Inflow = 15.51 cfs @ 11.98 hrs, Volume= 0.739 af
Outflow = 5.41 cfs @ 12.12 hrs, Volume= 0.687 af, Atten= 65%, Lag= 8.2 min
Primary = 5.41 cfs @ 12.12 hrs, Volume= 0.687 af
Routed to Link 1L : (new Link)
Secondary = 0.00 cfs @ 5.00 hrs, Volume= 0.000 af
Routed to Link 1L : (new Link)

Routing by Stor-Ind method, Time Span= 5.00-20.00 hrs, dt= 0.05 hrs
Peak Elev= 168.68' @ 12.12 hrs Surf.Area= 6,246 sf Storage= 13,668 cf

Plug-Flow detention time= 80.9 min calculated for 0.685 af (93% of inflow)
Center-of-Mass det. time= 55.6 min (821.5 - 765.9)

Volume	Invert	Avail.Storage	Storage Description
#1	166.00'	22,759 cf	**Custom Stage Data (Pyramidal)** Listed below (Recalc)

Elevation (feet)	Surf.Area (sq-ft)	Inc.Store (cubic-feet)	Cum.Store (cubic-feet)	Wet.Area (sq-ft)
166.00	4,049	0	0	4,049
168.00	5,639	9,644	9,644	5,733
170.00	7,521	13,115	22,759	7,723

Device	Routing	Invert	Outlet Devices
#1	Primary	166.00'	**18.0" Round Culvert** L= 100.0' CPP, square edge headwall, Ke= 0.500 Inlet / Outlet Invert= 166.00' / 164.00' S= 0.0200 '/' Cc= 0.900 n= 0.013 Corrugated PE, smooth interior, Flow Area= 1.77 sf
#2	Secondary	168.75'	**9.0' long Sharp-Crested Rectangular Weir** 2 End Contraction(s)
#3	Device 1	166.00'	**Custom Weir/Orifice, Cv= 2.62 (C= 3.28)** Head (feet) 0.00 2.75 Width (feet) 0.00 0.90
#4	Device 1	166.00'	**3.0" Vert. Orifice/Grate** C= 0.600 Limited to weir flow at low heads

Primary OutFlow Max=5.35 cfs @ 12.12 hrs HW=168.67' (Free Discharge)
└**1=Culvert** (Passes 5.35 cfs of 11.78 cfs potential flow)
  └**3=Custom Weir/Orifice** (Weir Controls 4.97 cfs @ 4.28 fps)
  └**4=Orifice/Grate** (Orifice Controls 0.38 cfs @ 7.67 fps)

Secondary OutFlow Max=0.00 cfs @ 5.00 hrs HW=166.00' (Free Discharge)
└**2=Sharp-Crested Rectangular Weir** (Controls 0.00 cfs)

Summary for Link 1L: (new Link)

Inflow Area = 6.838 ac, 17.42% Impervious, Inflow Depth > 2.83" for 50-yr event
Inflow = 18.96 cfs @ 12.12 hrs, Volume= 1.614 af
Primary = 18.96 cfs @ 12.12 hrs, Volume= 1.614 af, Atten= 0%, Lag= 0.0 min
Routed to Link 2L : (new Link)
Secondary = 0.00 cfs @ 5.00 hrs, Volume= 0.000 af

Primary outflow = Inflow below 1,000.00 cfs, Time Span= 5.00-20.00 hrs, dt= 0.05 hrs

Summary for Link 2L: (new Link)

Inflow Area = 36.176 ac, 3.42% Impervious, Inflow Depth > 3.00" for 50-yr event
Inflow = 103.72 cfs @ 12.17 hrs, Volume= 9.052 af
Primary = 103.72 cfs @ 12.17 hrs, Volume= 9.052 af, Atten= 0%, Lag= 0.0 min
Secondary = 0.00 cfs @ 5.00 hrs, Volume= 0.000 af

Primary outflow = Inflow below 1,000.00 cfs, Time Span= 5.00-20.00 hrs, dt= 0.05 hrs

APPENDIX D

SOIL SURVEY INFORMATION

United States Department of Agriculture

NRCS

Natural Resources Conservation Service

A product of the National Cooperative Soil Survey, a joint effort of the United States Department of Agriculture and other Federal agencies, State agencies including the Agricultural Experiment Stations, and local participants

Custom Soil Resource Report for Strafford County, New Hampshire

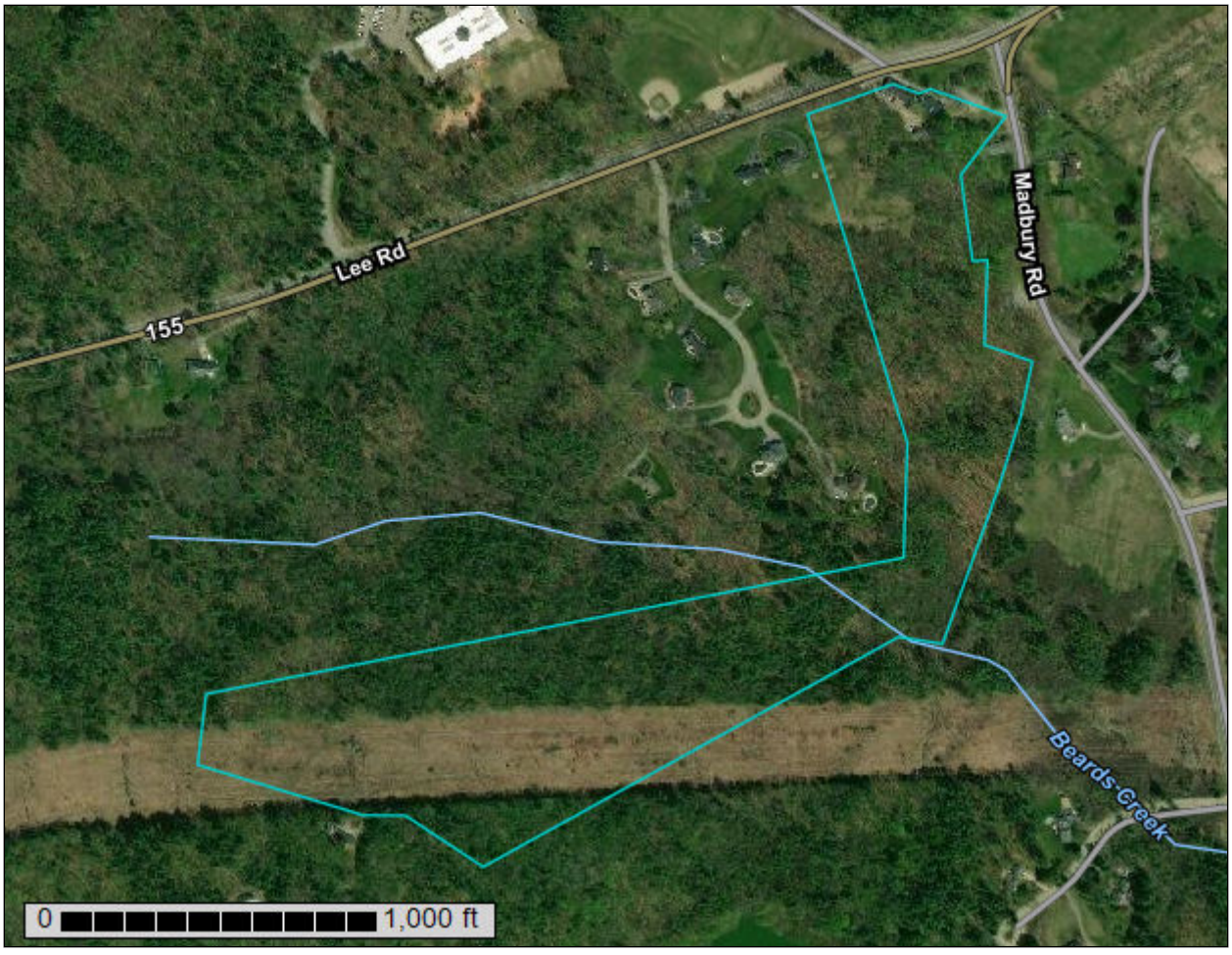

October 8, 2020

Custom Soil Resource Report
Soil Map

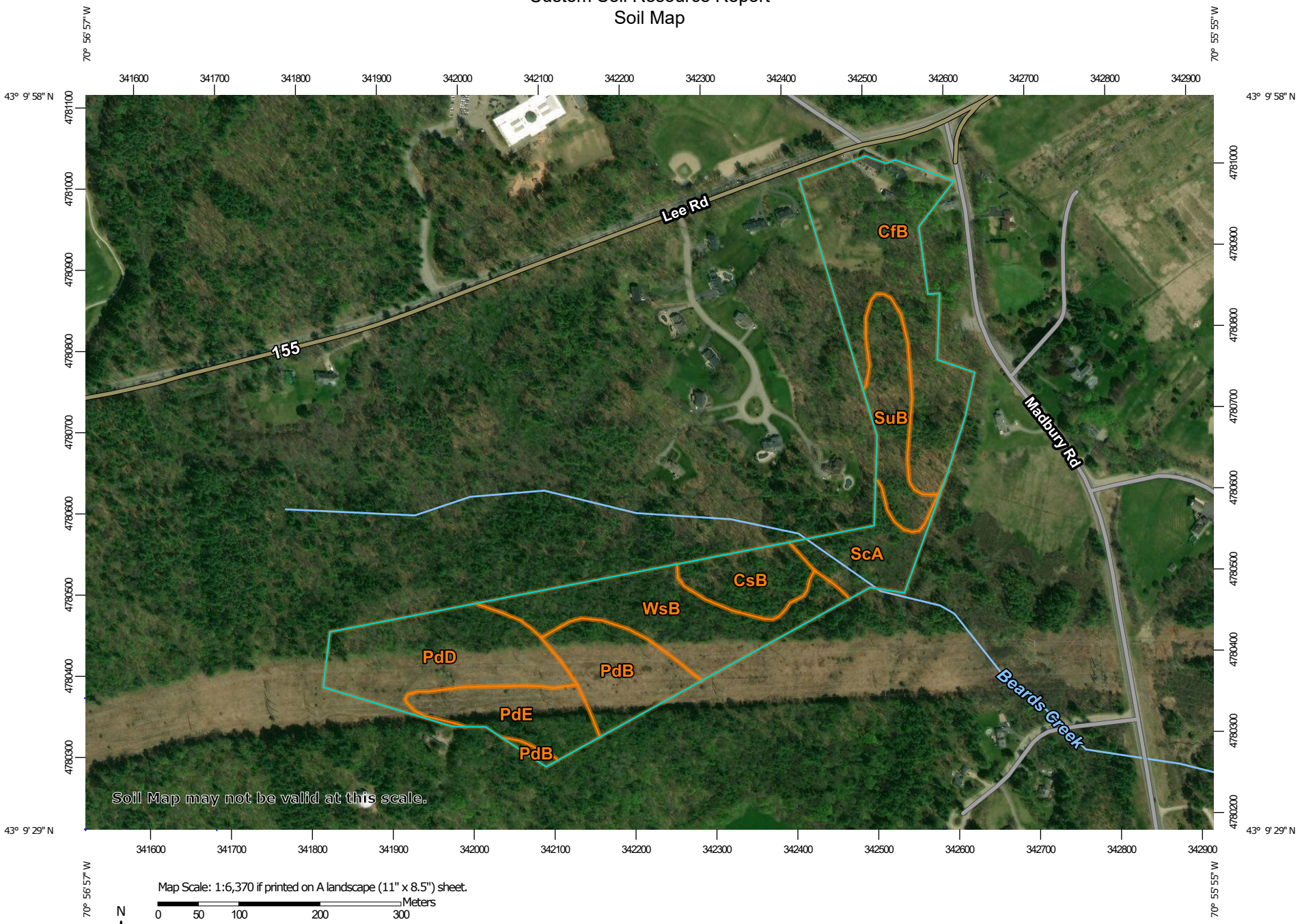

Map Scale: 1:6,370 if printed on A landscape (11" x 8.5") sheet.

N

Meters: 0 50 100 200 300

Feet: 0 300 600 1200 1800

Map projection: Web Mercator Corner coordinates: WGS84 Edge tics: UTM Zone 19N WGS84

MAP LEGEND

Area of Interest (AOI)
- Area of Interest (AOI)

Soils
- Soil Map Unit Polygons
- Soil Map Unit Lines
- Soil Map Unit Points

Special Point Features
- Blowout
- Borrow Pit
- Clay Spot
- Closed Depression
- Gravel Pit
- Gravelly Spot
- Landfill
- Lava Flow
- Marsh or swamp
- Mine or Quarry
- Miscellaneous Water
- Perennial Water
- Rock Outcrop
- Saline Spot
- Sandy Spot
- Severely Eroded Spot
- Sinkhole
- Slide or Slip
- Sodic Spot
- Spoil Area
- Stony Spot
- Very Stony Spot
- Wet Spot
- Other
- Special Line Features

Water Features
- Streams and Canals

Transportation
- Rails
- Interstate Highways
- US Routes
- Major Roads
- Local Roads

Background
- Aerial Photography

MAP INFORMATION

The soil surveys that comprise your AOI were mapped at 1:20,000.

Warning: Soil Map may not be valid at this scale.

Enlargement of maps beyond the scale of mapping can cause misunderstanding of the detail of mapping and accuracy of soil line placement. The maps do not show the small areas of contrasting soils that could have been shown at a more detailed scale.

Please rely on the bar scale on each map sheet for map measurements.

Source of Map: Natural Resources Conservation Service
Web Soil Survey URL:
Coordinate System: Web Mercator (EPSG:3857)

Maps from the Web Soil Survey are based on the Web Mercator projection, which preserves direction and shape but distorts distance and area. A projection that preserves area, such as the Albers equal-area conic projection, should be used if more accurate calculations of distance or area are required.

This product is generated from the USDA-NRCS certified data as of the version date(s) listed below.

Soil Survey Area: Strafford County, New Hampshire
Survey Area Data: Version 20, May 29, 2020

Soil map units are labeled (as space allows) for map scales 1:50,000 or larger.

Date(s) aerial images were photographed: Dec 31, 2009—Sep 9, 2017

The orthophoto or other base map on which the soil lines were compiled and digitized probably differs from the background imagery displayed on these maps. As a result, some minor shifting of map unit boundaries may be evident.

Map Unit Legend

Map Unit Symbol	Map Unit Name	Acres in AOI	Percent of AOI
CfB	Charlton fine sandy loam, 3 to 8 percent slopes	9.6	25.4%
CsB	Charlton fine sandy loam, 3 to 8 percent slopes, very stony	2.6	6.8%
PdB	Paxton fine sandy loam, 0 to 8 percent slopes, very stony	3.9	10.2%
PdD	Paxton fine sandy loam, 15 to 25 percent slopes, very stony	6.5	17.1%
PdE	Paxton very stony fine sandy loam, 25 to 60 percent slopes	3.3	8.6%
ScA	Scantic silt loam, 0 to 3 percent slopes	2.7	7.0%
SuB	Sutton fine sandy loam, 0 to 8 percent slopes, very stony	3.3	8.7%
WsB	Woodbridge fine sandy loam, 0 to 8 percent slopes, very stony	6.2	16.2%
Totals for Area of Interest		**38.0**	**100.0%**

Map Unit Descriptions

The map units delineated on the detailed soil maps in a soil survey represent the soils or miscellaneous areas in the survey area. The map unit descriptions, along with the maps, can be used to determine the composition and properties of a unit.

A map unit delineation on a soil map represents an area dominated by one or more major kinds of soil or miscellaneous areas. A map unit is identified and named according to the taxonomic classification of the dominant soils. Within a taxonomic class there are precisely defined limits for the properties of the soils. On the landscape, however, the soils are natural phenomena, and they have the characteristic variability of all natural phenomena. Thus, the range of some observed properties may extend beyond the limits defined for a taxonomic class. Areas of soils of a single taxonomic class rarely, if ever, can be mapped without including areas of other taxonomic classes. Consequently, every map unit is made up of the soils or miscellaneous areas for which it is named and some minor components that belong to taxonomic classes other than those of the major soils.

Most minor soils have properties similar to those of the dominant soil or soils in the map unit, and thus they do not affect use and management. These are called noncontrasting, or similar, components. They may or may not be mentioned in a particular map unit description. Other minor components, however, have properties and behavioral characteristics divergent enough to affect use or to require different management. These are called contrasting, or dissimilar, components. They generally are in small areas and could not be mapped separately because of the scale used. Some small areas of strongly contrasting soils or miscellaneous areas

are identified by a special symbol on the maps. If included in the database for a given area, the contrasting minor components are identified in the map unit descriptions along with some characteristics of each. A few areas of minor components may not have been observed, and consequently they are not mentioned in the descriptions, especially where the pattern was so complex that it was impractical to make enough observations to identify all the soils and miscellaneous areas on the landscape.

The presence of minor components in a map unit in no way diminishes the usefulness or accuracy of the data. The objective of mapping is not to delineate pure taxonomic classes but rather to separate the landscape into landforms or landform segments that have similar use and management requirements. The delineation of such segments on the map provides sufficient information for the development of resource plans. If intensive use of small areas is planned, however, onsite investigation is needed to define and locate the soils and miscellaneous areas.

An identifying symbol precedes the map unit name in the map unit descriptions. Each description includes general facts about the unit and gives important soil properties and qualities.

Soils that have profiles that are almost alike make up a *soil series*. Except for differences in texture of the surface layer, all the soils of a series have major horizons that are similar in composition, thickness, and arrangement.

Soils of one series can differ in texture of the surface layer, slope, stoniness, salinity, degree of erosion, and other characteristics that affect their use. On the basis of such differences, a soil series is divided into *soil phases*. Most of the areas shown on the detailed soil maps are phases of soil series. The name of a soil phase commonly indicates a feature that affects use or management. For example, Alpha silt loam, 0 to 2 percent slopes, is a phase of the Alpha series.

Some map units are made up of two or more major soils or miscellaneous areas. These map units are complexes, associations, or undifferentiated groups.

A *complex* consists of two or more soils or miscellaneous areas in such an intricate pattern or in such small areas that they cannot be shown separately on the maps. The pattern and proportion of the soils or miscellaneous areas are somewhat similar in all areas. Alpha-Beta complex, 0 to 6 percent slopes, is an example.

An *association* is made up of two or more geographically associated soils or miscellaneous areas that are shown as one unit on the maps. Because of present or anticipated uses of the map units in the survey area, it was not considered practical or necessary to map the soils or miscellaneous areas separately. The pattern and relative proportion of the soils or miscellaneous areas are somewhat similar. Alpha-Beta association, 0 to 2 percent slopes, is an example.

An *undifferentiated group* is made up of two or more soils or miscellaneous areas that could be mapped individually but are mapped as one unit because similar interpretations can be made for use and management. The pattern and proportion of the soils or miscellaneous areas in a mapped area are not uniform. An area can be made up of only one of the major soils or miscellaneous areas, or it can be made up of all of them. Alpha and Beta soils, 0 to 2 percent slopes, is an example.

Some surveys include *miscellaneous areas*. Such areas have little or no soil material and support little or no vegetation. Rock outcrop is an example.

Strafford County, New Hampshire

CfB—Charlton fine sandy loam, 3 to 8 percent slopes

Map Unit Setting

National map unit symbol: 2wh0n
Elevation: 0 to 1,440 feet
Mean annual precipitation: 36 to 71 inches
Mean annual air temperature: 39 to 55 degrees F
Frost-free period: 140 to 240 days
Farmland classification: All areas are prime farmland

Map Unit Composition

Charlton and similar soils: 85 percent
Minor components: 15 percent
Estimates are based on observations, descriptions, and transects of the mapunit.

Description of Charlton

Setting

Landform: Hills, ground moraines, ridges
Landform position (two-dimensional): Backslope, shoulder, summit
Landform position (three-dimensional): Crest, side slope, nose slope
Down-slope shape: Linear, convex
Across-slope shape: Convex
Parent material: Coarse-loamy melt-out till derived from granite, gneiss, and/or schist

Typical profile

Ap - 0 to 7 inches: fine sandy loam
Bw - 7 to 22 inches: gravelly fine sandy loam
C - 22 to 65 inches: gravelly fine sandy loam

Properties and qualities

Slope: 3 to 8 percent
Depth to restrictive feature: More than 80 inches
Drainage class: Well drained
Runoff class: Low
Capacity of the most limiting layer to transmit water (Ksat): Moderately low to high (0.14 to 14.17 in/hr)
Depth to water table: More than 80 inches
Frequency of flooding: None
Frequency of ponding: None
Maximum salinity: Nonsaline (0.0 to 1.9 mmhos/cm)
Available water capacity: Moderate (about 6.9 inches)

Interpretive groups

Land capability classification (irrigated): None specified
Land capability classification (nonirrigated): 2e
Hydrologic Soil Group: B
Ecological site: F144AY034CT - Well Drained Till Uplands
Hydric soil rating: No

Minor Components

Sutton

Percent of map unit: 8 percent
Landform: Ground moraines, hills
Landform position (two-dimensional): Footslope
Landform position (three-dimensional): Base slope
Down-slope shape: Concave
Across-slope shape: Linear
Hydric soil rating: No

Paxton

Percent of map unit: 5 percent
Landform: Drumlins, hills, ground moraines
Landform position (two-dimensional): Backslope, summit, shoulder
Landform position (three-dimensional): Side slope, crest
Down-slope shape: Linear, convex
Across-slope shape: Convex
Hydric soil rating: No

Chatfield

Percent of map unit: 1 percent
Landform: Hills, ridges
Landform position (two-dimensional): Backslope, shoulder, summit
Landform position (three-dimensional): Crest, side slope, nose slope
Down-slope shape: Convex
Across-slope shape: Linear, convex
Hydric soil rating: No

Leicester

Percent of map unit: 1 percent
Landform: Drainageways, depressions
Down-slope shape: Linear
Across-slope shape: Concave
Hydric soil rating: Yes

CsB—Charlton fine sandy loam, 3 to 8 percent slopes, very stony

Map Unit Setting

National map unit symbol: 2wh0r
Elevation: 0 to 1,570 feet
Mean annual precipitation: 36 to 71 inches
Mean annual air temperature: 39 to 55 degrees F
Frost-free period: 140 to 240 days
Farmland classification: Farmland of local importance

Map Unit Composition

Charlton, very stony, and similar soils: 85 percent
Minor components: 15 percent
Estimates are based on observations, descriptions, and transects of the mapunit.

Description of Charlton, Very Stony

Setting

Landform: Ground moraines, ridges, hills
Landform position (two-dimensional): Backslope, shoulder, summit
Landform position (three-dimensional): Side slope, crest, nose slope
Down-slope shape: Linear, convex
Across-slope shape: Convex
Parent material: Coarse-loamy melt-out till derived from granite, gneiss, and/or schist

Typical profile

Oe - 0 to 2 inches: moderately decomposed plant material
A - 2 to 4 inches: fine sandy loam
Bw - 4 to 27 inches: gravelly fine sandy loam
C - 27 to 65 inches: gravelly fine sandy loam

Properties and qualities

Slope: 3 to 8 percent
Surface area covered with cobbles, stones or boulders: 1.6 percent
Depth to restrictive feature: More than 80 inches
Drainage class: Well drained
Runoff class: Low
Capacity of the most limiting layer to transmit water (Ksat): Moderately low to high (0.14 to 14.17 in/hr)
Depth to water table: More than 80 inches
Frequency of flooding: None
Frequency of ponding: None
Maximum salinity: Nonsaline (0.0 to 1.9 mmhos/cm)
Available water capacity: Moderate (about 8.7 inches)

Interpretive groups

Land capability classification (irrigated): None specified
Land capability classification (nonirrigated): 6s
Hydrologic Soil Group: B
Ecological site: F142XB009VT - Acidic Till Upland
Hydric soil rating: No

Minor Components

Sutton, very stony

Percent of map unit: 5 percent
Landform: Hills, ground moraines
Landform position (two-dimensional): Footslope
Landform position (three-dimensional): Base slope
Down-slope shape: Concave
Across-slope shape: Linear
Hydric soil rating: No

Paxton, very stony

Percent of map unit: 5 percent
Landform: Ground moraines, drumlins, hills
Landform position (two-dimensional): Backslope, shoulder, summit
Landform position (three-dimensional): Side slope, crest
Down-slope shape: Linear, convex
Across-slope shape: Convex

Hydric soil rating: No

Chatfield, very stony

Percent of map unit: 3 percent
Landform: Hills, ridges
Landform position (two-dimensional): Backslope, shoulder, summit
Landform position (three-dimensional): Crest, side slope, nose slope
Down-slope shape: Convex
Across-slope shape: Linear, convex
Hydric soil rating: No

Leicester, very stony

Percent of map unit: 2 percent
Landform: Drainageways, depressions
Down-slope shape: Linear
Across-slope shape: Concave
Hydric soil rating: Yes

PdB—Paxton fine sandy loam, 0 to 8 percent slopes, very stony

Map Unit Setting

National map unit symbol: 2w673
Elevation: 0 to 1,340 feet
Mean annual precipitation: 36 to 71 inches
Mean annual air temperature: 39 to 55 degrees F
Frost-free period: 140 to 240 days
Farmland classification: Farmland of local importance

Map Unit Composition

Paxton, very stony, and similar soils: 85 percent
Minor components: 15 percent
Estimates are based on observations, descriptions, and transects of the mapunit.

Description of Paxton, Very Stony

Setting

Landform: Drumlins, hills, ground moraines
Landform position (two-dimensional): Summit, shoulder, backslope
Landform position (three-dimensional): Crest, side slope
Down-slope shape: Linear, convex
Across-slope shape: Convex, linear
Parent material: Coarse-loamy lodgment till derived from gneiss, granite, and/or schist

Typical profile

Oe - 0 to 2 inches: moderately decomposed plant material
A - 2 to 10 inches: fine sandy loam
Bw1 - 10 to 17 inches: fine sandy loam
Bw2 - 17 to 28 inches: fine sandy loam
Cd - 28 to 67 inches: gravelly fine sandy loam

Properties and qualities

Slope: 0 to 8 percent
Surface area covered with cobbles, stones or boulders: 1.6 percent
Depth to restrictive feature: 20 to 43 inches to densic material
Drainage class: Well drained
Runoff class: Medium
Capacity of the most limiting layer to transmit water (Ksat): Very low to moderately low (0.00 to 0.14 in/hr)
Depth to water table: About 18 to 37 inches
Frequency of flooding: None
Frequency of ponding: None
Maximum salinity: Nonsaline (0.0 to 1.9 mmhos/cm)
Available water capacity: Low (about 4.7 inches)

Interpretive groups

Land capability classification (irrigated): None specified
Land capability classification (nonirrigated): 6s
Hydrologic Soil Group: C
Ecological site: F144AY007CT - Well Drained Dense Till Uplands
Hydric soil rating: No

Minor Components

Woodbridge, very stony

Percent of map unit: 8 percent
Landform: Drumlins, hills, ground moraines
Landform position (two-dimensional): Backslope, footslope, summit
Landform position (three-dimensional): Side slope, crest
Down-slope shape: Concave
Across-slope shape: Linear
Hydric soil rating: No

Ridgebury, very stony

Percent of map unit: 4 percent
Landform: Ground moraines, hills, depressions, drainageways, drumlins
Landform position (two-dimensional): Toeslope, footslope
Landform position (three-dimensional): Head slope, base slope
Down-slope shape: Concave
Across-slope shape: Concave
Hydric soil rating: Yes

Charlton, very stony

Percent of map unit: 3 percent
Landform: Hills
Landform position (two-dimensional): Shoulder, summit, backslope
Landform position (three-dimensional): Crest, side slope
Down-slope shape: Convex
Across-slope shape: Convex
Hydric soil rating: No

PdD—Paxton fine sandy loam, 15 to 25 percent slopes, very stony

Map Unit Setting

National map unit symbol: 2w67h
Elevation: 0 to 1,400 feet
Mean annual precipitation: 36 to 71 inches
Mean annual air temperature: 39 to 55 degrees F
Frost-free period: 140 to 240 days
Farmland classification: Not prime farmland

Map Unit Composition

Paxton, very stony, and similar soils: 90 percent
Minor components: 10 percent
Estimates are based on observations, descriptions, and transects of the mapunit.

Description of Paxton, Very Stony

Setting

Landform: Drumlins, hills, ground moraines
Landform position (two-dimensional): Backslope
Landform position (three-dimensional): Side slope
Down-slope shape: Linear, convex
Across-slope shape: Convex, linear
Parent material: Coarse-loamy lodgment till derived from gneiss, granite, and/or schist

Typical profile

Oe - 0 to 2 inches: moderately decomposed plant material
A - 2 to 10 inches: fine sandy loam
Bw1 - 10 to 17 inches: fine sandy loam
Bw2 - 17 to 28 inches: fine sandy loam
Cd - 28 to 67 inches: gravelly fine sandy loam

Properties and qualities

Slope: 15 to 25 percent
Surface area covered with cobbles, stones or boulders: 1.6 percent
Depth to restrictive feature: 20 to 43 inches to densic material
Drainage class: Well drained
Runoff class: High
Capacity of the most limiting layer to transmit water (Ksat): Very low to moderately low (0.00 to 0.14 in/hr)
Depth to water table: About 18 to 37 inches
Frequency of flooding: None
Frequency of ponding: None
Maximum salinity: Nonsaline (0.0 to 1.9 mmhos/cm)
Available water capacity: Low (about 4.7 inches)

Interpretive groups

Land capability classification (irrigated): None specified
Land capability classification (nonirrigated): 6s

Hydrologic Soil Group: C
Ecological site: F144AY007CT - Well Drained Dense Till Uplands
Hydric soil rating: No

Minor Components

Woodbridge, very stony
Percent of map unit: 5 percent
Landform: Hills, ground moraines, drumlins
Landform position (two-dimensional): Backslope
Landform position (three-dimensional): Side slope
Down-slope shape: Concave
Across-slope shape: Linear
Hydric soil rating: No

Charlton, very stony
Percent of map unit: 4 percent
Landform: Hills
Landform position (two-dimensional): Backslope
Landform position (three-dimensional): Side slope
Down-slope shape: Convex
Across-slope shape: Convex
Hydric soil rating: No

Ridgebury, very stony
Percent of map unit: 1 percent
Landform: Drainageways, hills, ground moraines, depressions, drumlins
Landform position (two-dimensional): Toeslope, footslope
Landform position (three-dimensional): Base slope, head slope
Down-slope shape: Concave
Across-slope shape: Concave
Hydric soil rating: Yes

PdE—Paxton very stony fine sandy loam, 25 to 60 percent slopes

Map Unit Setting
National map unit symbol: 9d8h
Elevation: 150 to 1,100 feet
Mean annual precipitation: 36 to 71 inches
Mean annual air temperature: 39 to 55 degrees F
Frost-free period: 140 to 240 days
Farmland classification: Not prime farmland

Map Unit Composition
Paxton and similar soils: 85 percent
Minor components: 15 percent
Estimates are based on observations, descriptions, and transects of the mapunit.

Description of Paxton

Setting

Parent material: Basal lodgement till derived from granite and gneiss and/or basal lodgement till derived from schist

Typical profile

H1 - 0 to 11 inches: very stony fine sandy loam
H2 - 11 to 22 inches: fine sandy loam
H3 - 22 to 41 inches: fine sandy loam

Properties and qualities

Slope: 25 to 60 percent
Surface area covered with cobbles, stones or boulders: 1.6 percent
Depth to restrictive feature: More than 80 inches
Drainage class: Well drained
Runoff class: High
Capacity of the most limiting layer to transmit water (Ksat): Very low to moderately high (0.00 to 0.20 in/hr)
Depth to water table: About 24 to 36 inches
Frequency of flooding: None
Frequency of ponding: None
Available water capacity: Low (about 4.4 inches)

Interpretive groups

Land capability classification (irrigated): None specified
Land capability classification (nonirrigated): 7s
Hydrologic Soil Group: C
Ecological site: F144AY007CT - Well Drained Dense Till Uplands
Hydric soil rating: No

Minor Components

Not named

Percent of map unit: 12 percent
Hydric soil rating: No

Hollis

Percent of map unit: 3 percent
Hydric soil rating: No

ScA—Scantic silt loam, 0 to 3 percent slopes

Map Unit Setting

National map unit symbol: 9d8s
Elevation: 0 to 260 feet
Mean annual precipitation: 36 to 71 inches
Mean annual air temperature: 39 to 55 degrees F
Frost-free period: 140 to 240 days
Farmland classification: Farmland of local importance

Map Unit Composition

Scantic and similar soils: 85 percent
Minor components: 15 percent
Estimates are based on observations, descriptions, and transects of the mapunit.

Description of Scantic

Setting

Landform: Marine terraces

Typical profile

H1 - 0 to 13 inches: silt loam
H2 - 13 to 23 inches: silty clay loam
H3 - 23 to 40 inches: silty clay

Properties and qualities

Slope: 0 to 3 percent
Depth to restrictive feature: More than 80 inches
Drainage class: Poorly drained
Runoff class: Medium
Capacity of the most limiting layer to transmit water (Ksat): Very low to moderately high (0.00 to 0.20 in/hr)
Depth to water table: About 0 to 12 inches
Frequency of flooding: None
Frequency of ponding: None
Available water capacity: Moderate (about 6.4 inches)

Interpretive groups

Land capability classification (irrigated): None specified
Land capability classification (nonirrigated): 4w
Hydrologic Soil Group: C/D
Hydric soil rating: Yes

Minor Components

Not named wet

Percent of map unit: 5 percent
Landform: Marine terraces
Hydric soil rating: Yes

Biddeford

Percent of map unit: 5 percent
Landform: Marine terraces
Hydric soil rating: Yes

Swanton

Percent of map unit: 5 percent
Landform: Marine terraces
Hydric soil rating: Yes

SuB—Sutton fine sandy loam, 0 to 8 percent slopes, very stony

Map Unit Setting

National map unit symbol: 2xfff
Elevation: 0 to 1,410 feet
Mean annual precipitation: 36 to 71 inches
Mean annual air temperature: 39 to 55 degrees F
Frost-free period: 140 to 240 days
Farmland classification: Not prime farmland

Map Unit Composition

Sutton, very stony, and similar soils: 85 percent
Minor components: 15 percent
Estimates are based on observations, descriptions, and transects of the mapunit.

Description of Sutton, Very Stony

Setting

Landform: Hills, ground moraines
Landform position (two-dimensional): Footslope
Landform position (three-dimensional): Base slope
Down-slope shape: Concave
Across-slope shape: Linear
Parent material: Coarse-loamy melt-out till derived from gneiss, granite, and/or schist

Typical profile

Oi - 0 to 2 inches: slightly decomposed plant material
A - 2 to 7 inches: fine sandy loam
Bw1 - 7 to 19 inches: fine sandy loam
Bw2 - 19 to 27 inches: sandy loam
C1 - 27 to 41 inches: gravelly sandy loam
C2 - 41 to 62 inches: gravelly sandy loam

Properties and qualities

Slope: 0 to 8 percent
Surface area covered with cobbles, stones or boulders: 1.6 percent
Depth to restrictive feature: More than 80 inches
Drainage class: Moderately well drained
Runoff class: Very high
Capacity of the most limiting layer to transmit water (Ksat): Moderately low to high (0.14 to 14.17 in/hr)
Depth to water table: About 12 to 27 inches
Frequency of flooding: None
Frequency of ponding: None
Maximum salinity: Nonsaline to very slightly saline (0.0 to 2.0 mmhos/cm)
Available water capacity: Moderate (about 8.5 inches)

Interpretive groups

Land capability classification (irrigated): None specified

Land capability classification (nonirrigated): 6s
Hydrologic Soil Group: B/D
Ecological site: F144AY008CT - Moist Till Uplands
Hydric soil rating: No

Minor Components

Charlton, very stony
Percent of map unit: 7 percent
Landform: Ridges, hills, ground moraines
Landform position (two-dimensional): Backslope, shoulder, summit
Landform position (three-dimensional): Crest, side slope
Down-slope shape: Linear, convex
Across-slope shape: Convex
Hydric soil rating: No

Canton, very stony
Percent of map unit: 4 percent
Landform: Ridges, hills, moraines
Landform position (two-dimensional): Backslope, shoulder, summit
Landform position (three-dimensional): Side slope, crest
Down-slope shape: Convex, linear
Across-slope shape: Convex
Hydric soil rating: No

Leicester, very stony
Percent of map unit: 3 percent
Landform: Hills, drainageways, ground moraines, depressions
Landform position (two-dimensional): Footslope, toeslope
Landform position (three-dimensional): Base slope
Down-slope shape: Concave, linear
Across-slope shape: Concave
Hydric soil rating: Yes

Whitman, very stony
Percent of map unit: 1 percent
Landform: Depressions, drainageways, hills, ground moraines, drumlins
Landform position (two-dimensional): Toeslope
Landform position (three-dimensional): Base slope
Down-slope shape: Concave
Across-slope shape: Concave
Hydric soil rating: Yes

WsB—Woodbridge fine sandy loam, 0 to 8 percent slopes, very stony

Map Unit Setting
National map unit symbol: 2t2qr
Elevation: 0 to 1,440 feet
Mean annual precipitation: 36 to 71 inches
Mean annual air temperature: 39 to 55 degrees F
Frost-free period: 140 to 240 days

Farmland classification: Not prime farmland

Map Unit Composition

Woodbridge, very stony, and similar soils: 82 percent
Minor components: 18 percent
Estimates are based on observations, descriptions, and transects of the mapunit.

Description of Woodbridge, Very Stony

Setting

Landform: Drumlins, hills, ground moraines
Landform position (two-dimensional): Backslope, footslope, summit
Landform position (three-dimensional): Side slope
Down-slope shape: Concave
Across-slope shape: Linear
Parent material: Coarse-loamy lodgment till derived from gneiss, granite, and/or schist

Typical profile

Oe - 0 to 2 inches: moderately decomposed plant material
A - 2 to 9 inches: fine sandy loam
Bw1 - 9 to 20 inches: fine sandy loam
Bw2 - 20 to 32 inches: fine sandy loam
Cd - 32 to 67 inches: gravelly fine sandy loam

Properties and qualities

Slope: 0 to 8 percent
Surface area covered with cobbles, stones or boulders: 1.6 percent
Depth to restrictive feature: 20 to 43 inches to densic material
Drainage class: Moderately well drained
Runoff class: Medium
Capacity of the most limiting layer to transmit water (Ksat): Very low to moderately low (0.00 to 0.14 in/hr)
Depth to water table: About 19 to 27 inches
Frequency of flooding: None
Frequency of ponding: None
Maximum salinity: Nonsaline (0.0 to 1.9 mmhos/cm)
Available water capacity: Low (about 4.0 inches)

Interpretive groups

Land capability classification (irrigated): None specified
Land capability classification (nonirrigated): 6s
Hydrologic Soil Group: C/D
Ecological site: F144AY037MA - Moist Dense Till Uplands
Hydric soil rating: No

Minor Components

Paxton, very stony

Percent of map unit: 10 percent
Landform: Hills, ground moraines, drumlins
Landform position (two-dimensional): Shoulder, backslope, summit
Landform position (three-dimensional): Crest, side slope
Down-slope shape: Linear, convex
Across-slope shape: Convex, linear
Hydric soil rating: No

Ridgebury, very stony

Percent of map unit: 8 percent
Landform: Ground moraines, depressions, drumlins, drainageways, hills
Landform position (two-dimensional): Toeslope
Landform position (three-dimensional): Head slope, base slope
Down-slope shape: Concave
Across-slope shape: Concave
Hydric soil rating: Yes

APPENDIX E

FEMA FIRM MAP

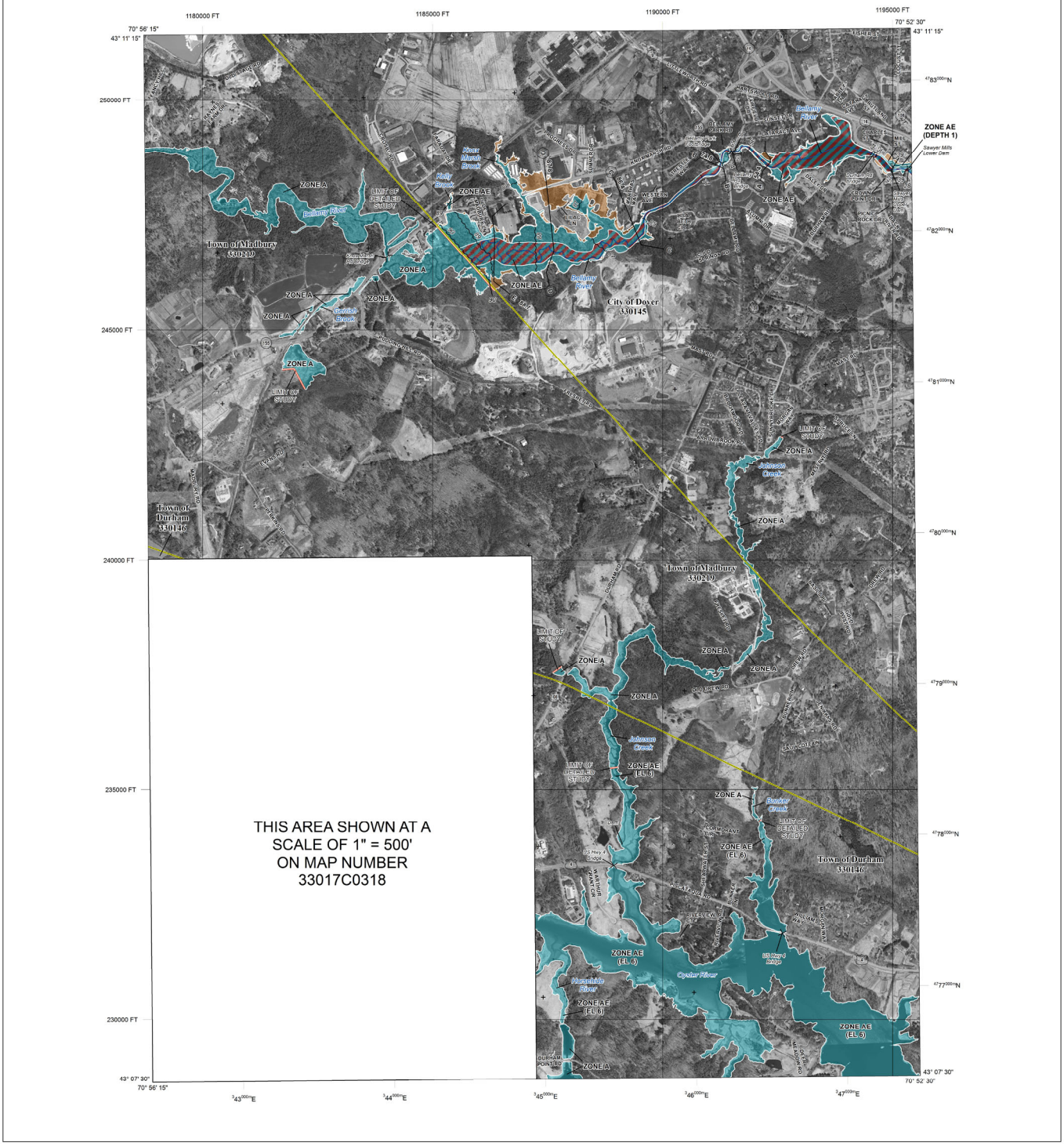

THIS AREA SHOWN AT A SCALE OF 1" = 500' ON MAP NUMBER 33017C0318

FLOOD HAZARD INFORMATION

SEE FIS REPORT FOR ZONE DESCRIPTIONS

THE INFORMATION DEPICTED ON THIS MAP AND SUPPORTING DOCUMENTATION ARE ALSO AVAILABLE IN DIGITAL FORMAT AT

HTTP://MSC.FEMA.GOV

SPECIAL FLOOD HAZARD AREAS

- Without Base Flood Elevation (BFE) *Zone A, V, A99*
- With BFE or Depth *Zone AE, AO, AH, VE, AR*
- Regulatory Floodway

OTHER AREAS OF FLOOD HAZARD

- 0.2% Annual Chance Flood Hazard, Areas of 1% annual chance flood with average depth less than one foot or with drainage areas of less than one square mile *Zone X*
- Future Conditions 1% Annual Chance Flood Hazard *Zone X*
- Area with Reduced Flood Risk due to Levee See Notes. *Zone X*

OTHER AREAS

- NO SCREEN — Areas Determined to be Outside the 0.2% Annual Chance Floodplain *Zone X*
- Area of Undetermined Flood Hazard *Zone D*

GENERAL STRUCTURES

- Channel, Culvert, or Storm Sewer
- Accredited or Provisionally Accredited Levee, Dike, or Floodwall
- Non-accredited Levee, Dike, or Floodwall
- (E) 18.2 / 17.5 — Cross Sections with 1% Annual Chance Water Surface Elevation (BFE)
- (B) — Coastal Transect
- Coastal Transect Baseline
- Profile Baseline
- Hydrographic Feature
- 513 — Base Flood Elevation Line (BFE)

OTHER FEATURES

- Limit of Study
- Jurisdiction Boundary

NOTES TO USERS

For information and questions about this map, available products associated with this FIRM including historic versions of this FIRM, how to order products or the National Flood Insurance Program in general, please call the FEMA Map Information eXchange at 1-877-FEMA-MAP (1-877-336-2627) or visit the FEMA Map Service Center website at http://msc.fema.gov. Available products may include previously issued Letters of Map Change, a Flood Insurance Study Report, and/or digital versions of this map. Many of these products can be ordered or obtained directly from the website. Users may determine the current map date for each FIRM panel by visiting the FEMA Map Service Center website or by calling the FEMA Map Information eXchange.

Communities annexing land on adjacent FIRM panels must obtain a current copy of the adjacent panel as well as the current FIRM index. These may be ordered directly from the Map Service Center at the number listed above.

For community and countywide map dates refer to the Flood Insurance Study report for this jurisdiction.

To determine if flood insurance is available in the community, contact your insurance agent or call the National Flood Insurance Program at 1-800-638-6620.

Base map information shown on this FIRM was provided in digital format by the United States Geological Survey (USGS). This information was derived from digital orthophotography at a 2-foot resolution from photography dated 2010.

SCALE

Map Projection:
New Hampshire State Plane Feet, FIPS Zone 2800, NAD1983;
Western Hemisphere; Vertical Datum: NAVD88

1 inch = 1,000 feet 1:12,000

0 1,000 2,000 4,000 Feet

0 255 510 1,020 Meters

PANEL LOCATOR

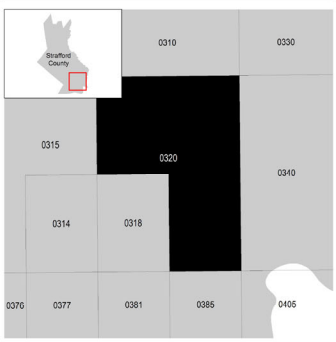

FEMA

National Flood Insurance Program

NATIONAL FLOOD INSURANCE PROGRAM

FLOOD INSURANCE RATE MAP

STRAFFORD COUNTY, NEW HAMPSHIRE

(ALL JURISDICTIONS)

PANEL 320 OF 405

FEMA

Panel Contains:

COMMUNITY	NUMBER	PANEL	SUFFIX
DOVER, CITY OF	330145	0320	E
DURHAM, TOWN OF	330146	0320	E
MADBURY, TOWN OF	330219	0320	E

VERSION NUMBER
2.2.2.1

MAP NUMBER
33017C0320E

MAP REVISED
September 30, 2015

APPENDIX F

INSPECTION & MAINTENANCE PLAN

AMBIT ENGINEERING, INC.
Civil Engineers & Land Surveyors

INSPECTION & LONG-TERM MAINTENANCE PLAN
FOR
PROPOSED HOUSING DEVELOPMENT

10 LEE ROAD
MADBURY, NH

Introduction

The intent of this plan is to provide 10 Lee Road, LLC (herein referred to as "owner") with a list of procedures that document the inspection and maintenance requirements of the stormwater management system for this development. Specifically, the detention pond and associated structures on the project site (collectively referred to as the "Stormwater Management System"). The contact information for the owner shall be kept current, and if there is a change of ownership of the property this plan must be transferred to the new owner.

The following inspection and maintenance program is necessary to keep the stormwater management system functioning properly and will help in maintaining a high quality of stormwater runoff to minimize potential environmental impacts. By following the enclosed procedures, the owner will be able to maintain the functional design of the stormwater management system and maximize its ability to remove sediment and other contaminants from site generated stormwater runoff.

Annual Report

The owner shall prepare an annual Inspection & Maintenance Report. The report shall include a summary of the system's maintenance and repair by transmission of the Inspection & Maintenance Log and other information as required. A copy of the report shall be delivered annually to the Madbury Code Enforcement Officer, if required.

Inspection & Maintenance Checklist/Log

The following pages contain the Stormwater Management System Inspection & Maintenance Requirements and a blank copy of the Stormwater Management System Inspection & Maintenance Log. These forms are provided to the owner as a guideline for performing the inspection and maintenance of the Stormwater Management System. This is a guideline and should be periodically reviewed for conformance with current practice and standards.

Stormwater Management System Components

The Stormwater Management System is designed to mitigate both the quantity and quality of site-generated stormwater runoff. As a result, the design includes the following elements:

Non-Structural BMPs

Non-Structural best management practices (BMP's) include temporary and permanent measures that typically require less labor and capital inputs and are intended to provide protection against erosion of soils. Examples of non-structural BMP's on this project include but are not limited to:

- Temporary and Permanent mulching
- Temporary and Permanent grass cover
- Shrubs and ground covers
- Miscellaneous landscape plantings
- Dust control
- Tree protection
- Topsoiling
- Sediment barriers
- Stabilized construction entrance

Structural BMPs

Structural BMP's are more labor and capital-intensive structures or installations that require more specialized personnel to install. Examples on this project include but are not limited to:

- Sediment Forebay
- Detention Pond
- Outlet Control Structure

Inspection and Maintenance Requirements

The following summarizes the inspection and maintenance requirements for the various BMP's that may be found on this project.

1. **Grassed areas:** After each rain event of 0.5" or more during a 24-hour period, inspect grassed areas for signs of disturbance, such as erosion. If damaged areas are discovered, immediately repair the damage. Repairs may include adding new topsoil, lime, seed, fertilizer, and mulch.
2. **Plantings**: Planting and landscaping (trees, shrubs) shall be monitored bi-monthly during the first year to insure viability and vigorous growth. Replace dead or dying vegetation with new stock and adjust the conditions that caused the dead or dying vegetation. During dryer times of the year, provide weekly watering or irrigation during the establishment period of the first year. Make the necessary adjustments to ensure long-term health of the vegetated covers, i.e., provide more permanent mulch or compost or other means of protection.

3. **Storm Drain and Catch Basin Inlets/Outlets:** Monitor drain inlets and outlet aprons for excessive accumulation of sediments or missing stone/riprap. Remove sediments as required to maintain filtering capabilities of the stone—replace missing riprap.
4. **Detention Pond:** After installation of the detention pond, perform the following inspections on an annual basis:

    a. Monitor for excessive or concentrated accumulations of debris, or excessive erosion below the various pipe inlets. Remove debris as required and replace or augment inlet fabric strips.
    b. Monitor the outfall structure for problems with uneven flow or clogged pipes. Repair or remove clogs as required.
    c. Monitor vegetation on pond and replace dead or dying vegetation as required.
    d. Monitor rodent screens and repair or replace as required.
    e. Monitor side slopes of ponds for damage or erosion—repair, as necessary.

Pollution Prevention

The following pollution prevention activities shall be undertaken to minimize potential impacts on stormwater runoff quality. The Contractor is responsible for all activities during construction. The Owner is responsible thereafter.

Spill Procedures

Any discharge of waste oil or other pollutant shall be reported immediately to the New Hampshire Department of Environmental Services (NHDES). The Contractor/Owner will be responsible for any incident of groundwater contamination resulting from the improper discharge of pollutants to the stormwater system and may be required by NHDES to remediate incidents that may impact groundwater quality. If the property ownership is transferred, the new owner will be informed of the legal responsibilities associated with operation of the stormwater system, as indicated above.

Sanitary Facilities

Sanitary facilities shall be provided during all phases of construction.

Material Storage

No on site trash facility is provided. The customers are required to remove trash from the site. Hazardous material storage is prohibited.

Material Disposal

All waste material, trash, sediment, and debris generated during construction shall be removed from the site and disposed of in accordance with applicable local, state, and federal guidelines and regulations. Removed sediments shall be if necessary dewatered prior to disposal.

Snow & Ice Management for Standard Asphalt and Walkways

Snow storage will be located such that no direct untreated discharges are possible to receiving waters from the storage site.

Invasive Species

Monitor the Stormwater Management System for signs of invasive species growth. If caught early, their eradication is much easier. The most likely places where invasions start is in wetter, disturbed soils or detention ponds. Species such as phragmites and purple loose-strife are common invaders in these wetter areas. If they are found, the owner shall refer to the fact-sheet created by the University of New Hampshire Cooperative Extension or contact a wetlands scientist with experience in invasive species control to implement a plan of action for eradication. Measures that do not require the application of chemical herbicides should be the first line of defense.

CLOSED DRAINAGE STRUCTURE MAINTENANCE SHEET

INSPECTION REQUIREMENTS		
ACTION TAKEN	**FREQUENCY**	**MAINTENANCE REQUIREMENTS**
-Outlet Control Structures *-Drain Manholes*	**Every other Month**	***Check for erosion or short-circuiting*** ***Check for sediment accumulation*** ***Check for floatable contaminants***
-Drainage Pipes	**1 time per 2 years**	***Check for sediment accumulation/clogging, or soiled runoff.***

MAINTENANCE LOG	
PROJECT NAME	
INSPECTOR NAME	**INSPECTOR CONTACT INFO**
DATE OF INSPECTION	**REASON FOR INSPECTION** ☐LARGE STORM EVENT ☐PERIODIC CHECK-IN
IS CORRECTIVE ACTION NEEDED? ☐YES ☐NO	**DESCRIBE ANY PROBLEMS, NEEDED MAINTENANCE**
DATE OF MAINTENANCE	**PERFORMED BY**
NOTES	

DETENTION POND MAINTENANCE SHEET

INSPECTION REQUIREMENTS		
ACTION TAKEN	**FREQUENCY**	**MAINTENANCE REQUIREMENTS**
FILTER OR POND SURFACE *-Check for sediment accumulation or clogged inlets/outlets.*	After heavy rains, monthly	*-Replace dead or dying vegetation* *-Remove Sediments When Required* *-Mow grasses at least twice yearly*

MAINTENANCE LOG	
PROJECT NAME	
INSPECTOR NAME	**INSPECTOR CONTACT INFO**
DATE OF INSPECTION	**REASON FOR INSPECTION** ☐LARGE STORM EVENT ☐PERIODIC CHECK-IN
IS CORRECTIVE ACTION NEEDED? ☐YES ☐NO	**DESCRIBE ANY PROBLEMS, NEEDED MAINTENANCE**
DATE OF MAINTENANCE	**PERFORMED BY**
NOTES	

JN 3142, 10 Lee Road OCS Rip Rap Calculations

Pipe diameter	18	inches
Pipe area	1.77	ft^2
50-year flow rate	5.41	cfs
V	3.06	ft/s
g	32.20	ft/s^2
C	0.86	
S	2.65	
Ishbash (bottom half)	78.59	
Minimum D50	1.43	inches

Ishbash Equation:

$$D_{50} = \frac{V_a^2}{2gC^2(G_s - 1)}$$

average Q per foot	0.22	cfs
Apron Length (La)	20.24	ft
Width of end of apron	24.74	ft
Width of start of apron	4.5	ft

Table 873.3A

RSP Class by Median Particle Size(3)

Nominal RSP Class by Median Particle Size(3)		d_{15}		d_{50}		d_{100}	Placement
Class (1), (2)	Size (in)	Min	Max	Min	Max	Max	Method
I	6	3.7	5.2	5.7	6.9	12.0	B
II	9	5.5	7.8	8.5	10.5	18.0	B
III	12	7.3	10.5	11.5	14.0	24.0	B
IV	15	9.2	13.0	14.5	17.5	30.0	B
V	18	11.0	15.5	17.0	20.5	36.0	B
VI	21	13.0	18.5	20.0	24.0	42.0	A or B
VII	24	14.5	21.0	23.0	27.5	48.0	A or B
VIII	30	18.5	26.0	28.5	34.5	48.0	A or B
IX	36	22.0	31.5	34.0	41.5	52.8	A
X	42	25.5	36.5	40.0	48.5	60.5	A
XI	46	28.0	39.4	43.7	53.1	66.6	A

NOTES:

(1)Rock grading and quality requirements per Standard Specifications.

(2)RSP-fabric Type of geotextile and quality requirements per Section 96 Rock Slope Protection Fabric of the Standard Specifications. For RSP Classes I thru VIII, use Class 8 RSP-fabric which has lower weight per unit area and it also has lower toughness (tensile x elongation, both at break) than Class 10 RSP-fabric. For RSP Classes IX thru XI, use Class 10 RSP-fabric.

(3)Intermediate, or B dimension (i.e., width) where A dimension is length, and C dimension is thickness.

Design Parameter	Criteria
Apron Length	$L_a = 1.8Q/D_o 1.5 + 7D_o$ (when TW < $D_o/2$) $L_a = 3.0Q/D_o 1.5 + 7D_o$ (when TW > $D_o/2$) Where: L_a = length of the apron (feet) D_o = maximum inside width of outlet pipe or channel (feet) Q = outlet discharge (cfs) TW = tailwater elevation (feet)
Apron Width at the Outlet End of the Apron (when there is a well-defined channel downstream of the apron)	Bottom width of the apron > bottom width of channel. The structural lining should extend at least 1 foot above the tailwater elevation but no lower than 2/3 of the vertical conduit dimension above the conduit invert
Apron Width at the Outlet End of the Apron (when there is ***no*** well-defined channel ddownstream of the apron)	$W = 3D_o + L_a$ (when TW < $D_o/2$) $W = 3D_o + 0.4L_a$ (when TW > $D_o/2$) Where: W = width of the apron (feet) L_a = length of the apron (feet) D_o = maximum inside width of outlet pipe or channel (feet) TW = tailwater elevation (feet)
Apron Width at the Culvert Outlet	$W = 3\ D_o$

LEGEND

EXISTING	PROPOSED	
D	D	PROPERTY LINE
X X	X X	STORM DRAIN
100	100	SILT FENCE
97x3	98x0	CONTOUR
		SPOT ELEVATION
		EDGE OF PAVEMENT (EP)
		SUBCATCHMENT LINE
ES	PS	SUBCATCHMENT NUMBER
1234	1234	AREA IN SQUARE FEET
WOODS	WOODS	DESCRIPTION OF COVER
1	1	POND (DESIGN MODEL)
DP1	DP1	REACH (DESIGN MODEL)

EXISTING	PROPOSED	
		DRAINAGE VECTOR
		EDGE OF WOODS / TREES
		CATCH BASIN
D	D	DRAIN MANHOLE
W	W	WELL
EL.	EL.	ELEVATION
EP	EP	EDGE OF PAVEMENT
FF	FF	FINISHED FLOOR
INV	INV	INVERT
TBM	TBM	TEMPORARY BENCH MARK
TYP	TYP	TYPICAL
		Tc PATH
SF	SF	SHEET FLOW
SCF	SCF	
CHANNEL	CHANNEL	CHANNEL FLOW
HSG	HSG	HYDROLGIC SOIL GROUP

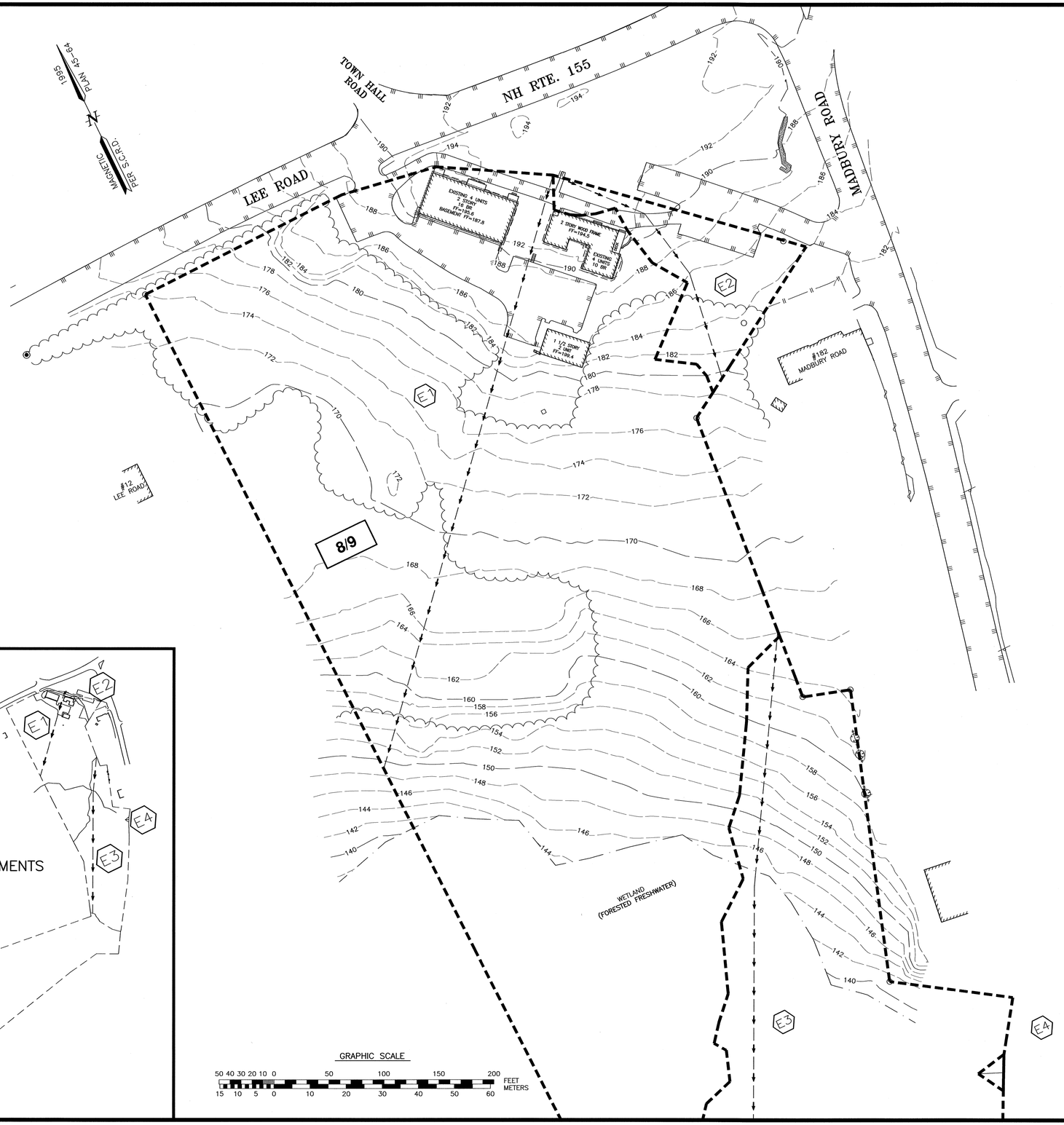

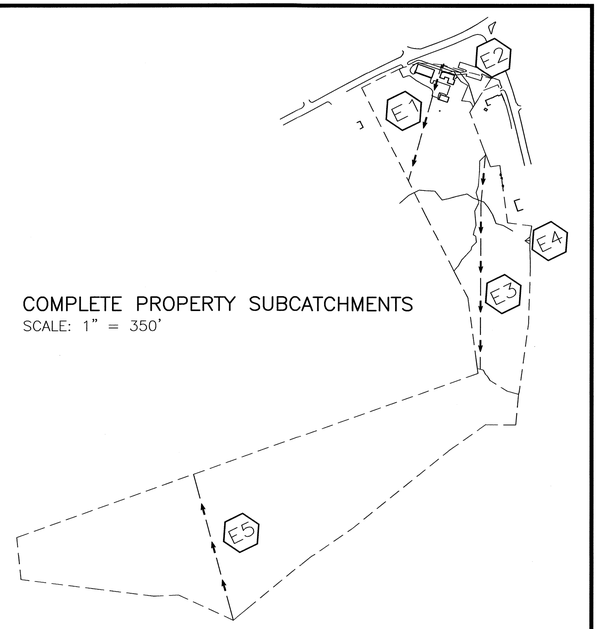

COMPLETE PROPERTY SUBCATCHMENTS
SCALE: 1" = 350'

GRAPHIC SCALE
50 40 30 20 10 0 50 100 150 200 FEET
15 10 5 0 10 20 30 40 50 60 METERS

AMBIT ENGINEERING, INC.
Civil Engineers & Land Surveyors
200 Griffin Road - Unit 3
Portsmouth, N.H. 03801-7114
Tel (603) 430-9282
Fax (603) 436-2315

NOTES:

1) THIS PLAN IS INTENDED FOR RUNOFF ANALYSIS ONLY AND SHALL NOT BE USED FOR CONSTRUCTION.

2) THE CONTRACTOR SHALL NOTIFY DIG SAFE AT 1-888-DIG-SAFE (1-888-344-7233) AT LEAST 72 HOURS PRIOR TO COMMENCING ANY EXCAVATION ON PUBLIC OR PRIVATE PROPERTY.

3) UNDERGROUND UTILITY LOCATIONS ARE BASED UPON BEST AVAILABLE EVIDENCE AND ARE NOT FIELD VERIFIED. LOCATING AND PROTECTING ANY ABOVEGROUND OR UNDERGROUND UTILITIES IS THE SOLE RESPONSIBILITY OF THE CONTRACTOR AND/OR THE OWNER. UTILITY CONFLICTS SHOULD BE REPORTED AT ONCE TO THE DESIGN ENGINEER.

4) CONTRACTOR SHALL INSTALL AND MAINTAIN EROSION CONTROL MEASURES IN ACCORDANCE WITH THE "NEW HAMPSHIRE STORMWATER MANUAL, VOLUME 3, EROSION AND SEDIMENT CONTROLS DURING CONSTRUCTION. (NHDES DECEMBER 2008).

PROPOSED HOUSING
10 LEE ROAD
MADBURY, N.H.

NO.	DESCRIPTION	DATE
0	ISSUED FOR COMMENT	9/16/21

REVISIONS

STATE OF NEW HAMPSHIRE - JOHN R. CHAGNON NO. 7851 LICENSED PROFESSIONAL ENGINEER

SCALE: 1" = 50' SEPTEMBER 2021

EXISTING DRAINAGE PLAN

W1

3142

J:\JOBS3\JN 3100's\3140's\3142\2019 Site Plan\Plans & Specs\Site\3142 Site 2021Pond.dwg, 10/29/2021 5:30:18 PM, Canon TX-3000.pc3

LEGEND

EXISTING	PROPOSED	
D	D	STORM DRAIN
X X	X X	SILT FENCE
100	100	CONTOUR
97x3	98x0	SPOT ELEVATION
		EDGE OF PAVEMENT (EP)
		SUBCATCHMENT LINE
6	600	SUBCATCHMENT NUMBER
1234 WOODS	1234 WOODS	AREA IN SQUARE FEET / DESCRIPTION OF COVER
6	600	POND (DESIGN MODEL)
6	600	REACH (DESIGN MODEL)
		DRAINAGE VECTOR
		EDGE OF WOODS / TREES
CB	CB	CATCH BASIN
DMH	DMH	DRAIN MANHOLE
W	W	WELL
EL.	EL.	ELEVATION
EP	EP	EDGE OF PAVEMENT
FF	FF	FINISHED FLOOR
INV	INV	INVERT
TBM	TBM	TEMPORARY BENCH MARK
TYP	TYP	TYPICAL
		Tc PATH
HSG	HSG	HYDROLGIC SOIL GROUP
SCF	SCF	SHALLOW CONCENTRATED FLOW
SF	SF	SHEET FLOW
CHANNEL	CHANNEL	CHANNEL FLOW
DP1	DP1	DESIGN POINT

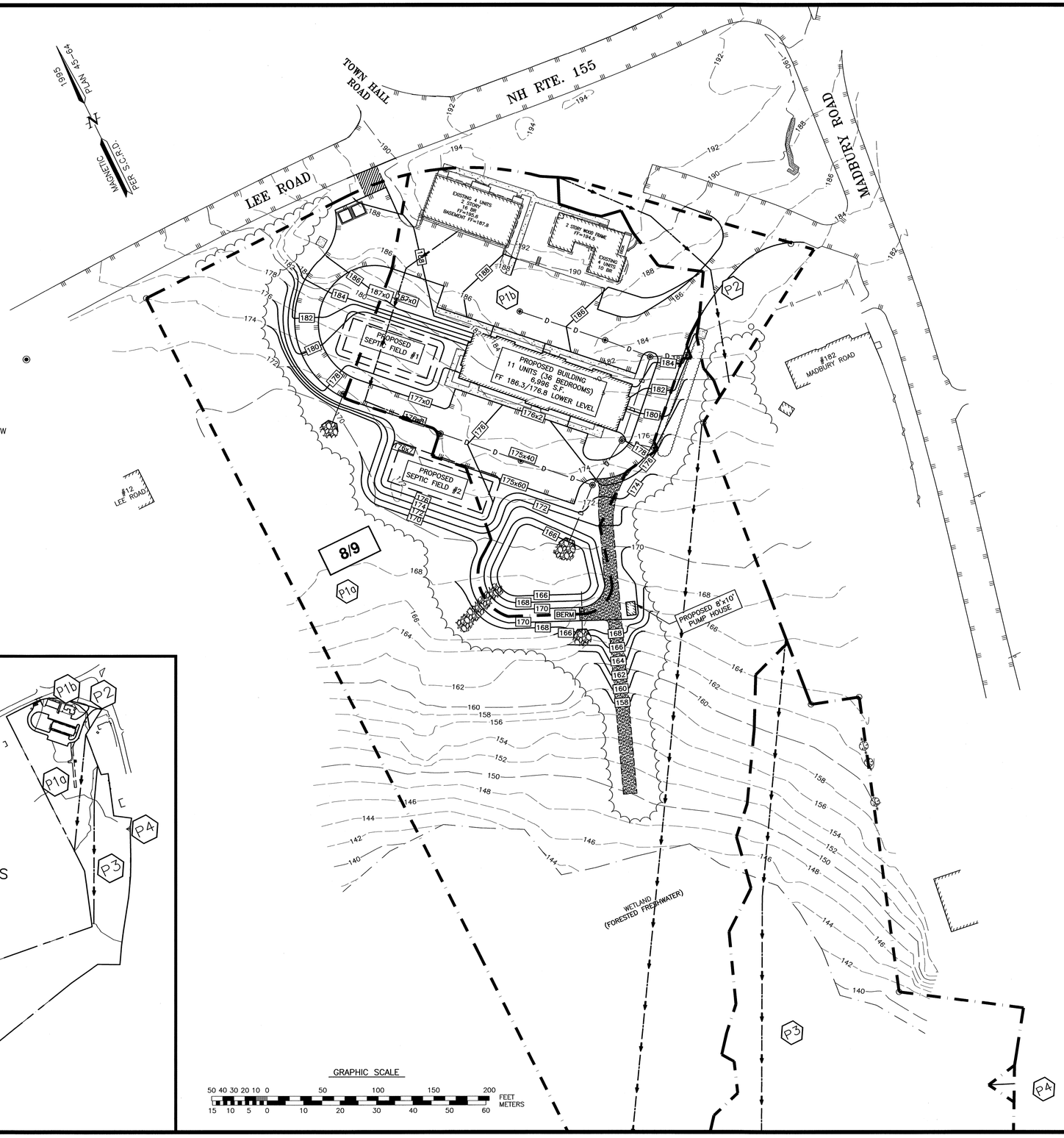

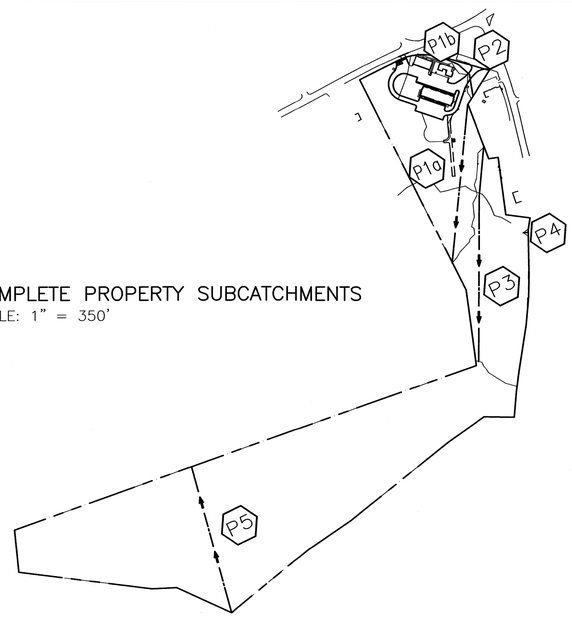

COMPLETE PROPERTY SUBCATCHMENTS
SCALE: 1" = 350'

AMBIT ENGINEERING, INC.
Civil Engineers & Land Surveyors
200 Griffin Road - Unit 3
Portsmouth, N.H. 03801-7114
Tel (603) 430-9282
Fax (603) 436-2315

NOTES:

1) THIS PLAN IS INTENDED FOR RUNOFF ANALYSIS ONLY AND SHALL NOT BE USED FOR CONSTRUCTION.

2) THE CONTRACTOR SHALL NOTIFY DIG SAFE AT 1-888-DIG-SAFE (1-888-344-7233) AT LEAST 72 HOURS PRIOR TO COMMENCING ANY EXCAVATION ON PUBLIC OR PRIVATE PROPERTY.

3) UNDERGROUND UTILITY LOCATIONS ARE BASED UPON BEST AVAILABLE EVIDENCE AND ARE NOT FIELD VERIFIED. LOCATING AND PROTECTING ANY ABOVEGROUND OR UNDERGROUND UTILITIES IS THE SOLE RESPONSIBILITY OF THE CONTRACTOR AND/OR THE OWNER. UTILITY CONFLICTS SHOULD BE REPORTED AT ONCE TO THE DESIGN ENGINEER.

4) CONTRACTOR SHALL INSTALL AND MAINTAIN EROSION CONTROL MEASURES IN ACCORDANCE WITH THE "NEW HAMPSHIRE STORMWATER MANUAL, VOLUME 3, EROSION AND SEDIMENT CONTROLS DURING CONSTRUCTION. (NHDES DECEMBER 2008).

PROPOSED HOUSING
10 LEE ROAD
MADBURY, N.H.

NO.	DESCRIPTION	DATE
0	ISSUED FOR APPROVAL	9/16/21

REVISIONS

JOHN E. CHAGNON No. 7651 LICENSED PROFESSIONAL ENGINEER STATE OF NEW HAMPSHIRE

SCALE: 1" = 50' 9/16/21

PLAN OF PROPOSED SUBCATCHMENTS

W2

3142

J:\OBS\JN 3100\3140\3142\2019 Site Plan\Plans & Specs\Site\3142 Site 2021Pond.dwg, 10/29/2021 5:33:16 PM, Canon TX-3000.pc3